PRELIMINARY MAINTENANCE MANUAL

MODE S TEST SYSTEM

SYSTEMS, INC.

PRELIMINARY MAINTENANCE MANUAL

MODE S
TEST SYSTEM

10200 West York Street / Wichita, Kansas 67215 U.S.A. / (316) 522-4981 / TWX 910-741-6952

1002-8801-300

MAINTENANCE MANUAL
MODE S TEST SYSTEM

PUBLISHED BY
IFR SYSTEMS, INC.
Wichita, Kansas

COPYRIGHT © 1991 by IFR SYSTEMS, INC.

All rights reserved. Printed in the United States of America. No part of this publication may be reproduced, stored in a retrieval system, or transmitted in any form or by any means, electronic, mechanical, photocopying, recording or otherwise without the prior permission of the publisher.

WARNING

HIGH VOLTAGE EQUIPMENT

THIS EQUIPMENT CONTAINS CERTAIN CIRCUITS AND/OR COMPONENTS OF EXTREMELY HIGH VOLTAGE POTENTIALS, CAPABLE OF CAUSING SERIOUS BODILY INJURY OR DEATH. WHEN PERFORMING ANY OF THE PROCEDURES CONTAINED IN THIS MANUAL, HEED ALL APPLICABLE SAFETY PRECAUTIONS.

RESCUE OF SHOCK VICTIMS

1. DO NOT ATTEMPT TO PULL OR GRAB THE VICTIM.
2. IF POSSIBLE, TURN OFF THE ELECTRICAL POWER.
3. IF YOU CANNOT TURN OFF ELECTRICAL POWER, PUSH, PULL OR LIFT THE VICTIM TO SAFETY USING A WOODEN POLE, ROPE OR SOME OTHER DRY INSULATING MATERIAL.

FIRST AID

1. AS SOON AS VICTIM IS FREE OF CONTACT WITH SOURCE OF ELECTRICAL SHOCK, MOVE VICTIM A SHORT DISTANCE AWAY FROM SHOCK HAZARD.
2. CALL FOR DOCTOR AND/OR AMBULANCE, IMMEDIATELY.
3. IF BREATHING HAS STOPPED; ADMINISTER CARDIO-PULMONARY RESUSCITATION (CPR), AS NEEDED.
4. IF VICTIM IS BREATHING, ATTEMPT TO CONTROL ALL SERIOUS BLEEDING.
5. KEEP VICTIM WARM, QUIET AND FLAT ON HIS/HER BACK.

CAUTION: INTEGRATED CIRCUITS AND SOLID STATE DEVICES SUCH AS MOS FETS, ESPECIALLY CMOS TYPES, ARE SUSCEPTIBLE TO DAMAGE BY ELECTROSTATIC DISCHARGES RECEIVED FROM IMPROPER HANDLING, THE USE OF UNGROUNDED TOOLS AND IMPROPER STORAGE AND PACKAGING. ANY MAINTENANCE TO THIS UNIT MUST BE PERFORMED WITH THE FOLLOWING PRECAUTIONS:

- BEFORE USE IN A CIRCUIT, KEEP ALL LEADS SHORTED TOGETHER EITHER BY THE USE OF VENDOR-SUPPLIED SHORTING SPRINGS OR BY INSERTING LEADS INTO A CONDUCTIVE MATERIAL.
- WHEN REMOVING DEVICES FROM THEIR CONTAINERS, GROUND THE HAND BEING USED WITH A CONDUCTIVE WRISTBAND.
- TIPS OF SOLDERING IRONS AND/OR ANY TOOLS USED MUST BE GROUNDED.
- DEVICES MUST NEVER BE INSERTED INTO NOR REMOVED FROM CIRCUITS WITH POWER ON.
- PC BOARDS, WHEN TAKEN OUT OF THE SET, MUST BE LAID ON A GROUNDED CONDUCTIVE MAT OR STORED IN A CONDUCTIVE STORAGE BAG. REMOVE ANY BUILT-IN POWER SOURCE, SUCH AS A BATTERY, BEFORE LAYING PC BOARDS ON A CONDUCTIVE MAT OR STORING IN A CONDUCTIVE BAG.
- PC BOARDS, IF BEING SHIPPED TO THE FACTORY FOR REPAIR, MUST BE PACKAGED IN A CONDUCTIVE BAG AND PLACED IN A WELL-CUSHIONED SHIPPING CONTAINER.

CAUTION: THE USE OF SIGNAL GENERATORS FOR MAINTENANCE AND OTHER ACTIVITIES CAN BE A SOURCE OF ELECTROMAGNETIC INTERFERENCE TO AVIATION RECEIVERS, WHICH CAN CAUSE DISRUPTION AND INTERFERENCE TO AERONAUTICAL SERVICE OUT TO A DISTANCE OF SEVERAL MILES.

CAUTION: USERS OF THIS EQUIPMENT SHOULD SCRUTINIZE ANY OPERATION WHICH RESULTS IN RADIATION OF A SIGNAL (DIRECTLY OR INDIRECTLY) AND ENSURE COMPLIANCE WITH INSTRUCTIONS IN FAA CIRCULAR AC 170-6C, DATED FEBRUARY 19, 1981.

TABLE OF CONTENTS

Section 1 - Calibration/Verification

A. General
B. Performance Requirements
C. Test Equipment Requirements
D. Preliminary Operations
E. Test Record
F. Calibration/Verification Procedures
G. Calibration/Verification Data Sheet

Section 2 - Assemblies/Schematics/BOMS

S-1403C Product Structure
S-1403C w/MLD Product Structure
S-1403C Composite Assembly
S-1403C Interconnect Diagram
S-1403C w/MLD Composite Assembly
S-1403C w/MLD Interconnect Diagram
Pulse PC Board Assembly
Front Panel Assembly
Front Panel Assembly w/MLD
Keyboard PC Board Assembly
Front Panel Processor PC Board Assembly
Front Panel Processor PC Board Assembly w/MLD
Processor PC Board Assembly
Power Supply Assembly
Power Distribution PC Board Assembly
Inverter Supply PC Board Assembly
Line Supply PC Board Assembly
Motherboard PC Board Assembly
Diversity Module Assembly
Diversity Module Assembly w/MLD
Modulator Assembly
Modulator Assembly w/MLD
Diversity I/O PC Board Assembly
Modulator PC Board Assembly
Modulator PC Board Assembly w/MLD
Video Filter PC Board Assembly
Video Detector PC Board Assembly (only w/MLD)
Power Termination Assembly
Source/Pwr Amp Assembly
1030 MHz Source PC Board Assembly
Pwr Amp PC Board Assembly
Attenuator Assembly (only w/MLD)
Attenuator Driver PC Board Assembly (only w/MLD)

Appendix A - Connector Pin-Out Tables
Appendix C - Test Equipment Requirements

THIS PAGE INTENTIONALLY LEFT BLANK.

2. Calibration/Verification

A. General

(1) The Calibration/Verification Procedures should be performed as a result of one or more of the following conditions:

- Failure to Meet Specifications

  If, during the course of normal operation, the Mode S Test System or any major function thereof fails to meet the performance specifications in 1-3-1 of the S-1403C Operation Manual, the Calibration/Verification Procedures should be performed.

- Module/Assembly Replacement

  If any one or more of the Mode S Test System modules/assemblies are replaced, the Calibration/Verification Procedures should be performed.

- Annual Calibration/Verification

  IFR Systems recommends an annual Calibration/Verification on the Mode S Test System to maintain proper testing standards.

(2) Controls, Connectors and Indicators

Refer to 1-2-2, Figure 6 in S-1403C Operation Manual for S-1403C controls, connectors and indicators (alphabetic character identifiers). Refer to 1-2-2, Figure 17 in S-1403C Operation Manual for ATC-1400A controls, connectors and indicators (numeric character identifiers).

(3) Disassembly Requirements

Remove top cover to S-1403C according to 1-2-1F in Mode S Test System Operation Manual. Remove top cover to ATC-1400A according to 2-3-1D in ATC-1400A Maintenance Manual.

CALIBRATION/VERIFICATION PROCEDURE — PAGE

Power Supply 3
Interrogation Pulses and SPR 5
Suppressor and Interference Pulses 11
RF Level 14
Antenna B 16
Reply Delay and PPMG 19

B. Performance Requirements

It is strongly recommended that personnel thoroughly read and understand all steps of the procedures to be performed and be familiar with the circuit under test. Knowledge of what power, frequency and waveform to be expected at each test point is recommended.

The Mode S Test System must be installed (with calibrated ATC-1400A) according to 1-2-1D in the Mode S Test System Operation Manual.

C. Test Equipment Requirements

Appendix C contains a comprehensive list of test equipment suitable for performing any procedure contained in this manual. Any other equipment meeting specifications listed in Appendix C may be substituted in place of recommended models.

NOTE: For certain procedures in this manual, the test equipment listed in Appendix C may exceed the minimum required specifications.

D. Preliminary Operations

(1) Safety Precautions

WARNING: REMOVE ALL JEWELRY OR OTHER COSMETIC APPAREL BEFORE PERFORMING ANY CALIBRATION/VERIFICATION PROCEDURE INVOLVING LIVE CIRCUITS.

WARNING: WHEN WORKING WITH LIVE CIRCUITS OF HIGH POTENTIAL, KEEP ONE HAND IN POCKET OR BEHIND BACK TO AVOID SERIOUS SHOCK HAZARD.

WARNING: USE ONLY INSULATED TROUBLESHOOTING TOOLS WHEN WORKING WITH LIVE CIRCUITS.

WARNING: FOR ADDED INSULATION, PLACE RUBBER BENCH MAT UNDERNEATH ALL POWERED BENCH EQUIPMENT, AS WELL AS A RUBBER MAT UNDERNEATH TECHNICIAN'S CHAIR.

WARNING: HEED ALL WARNINGS AND CAUTIONS CONCERNING MAXIMUM VOLTAGES AND POWER INPUTS.

CAUTION: THE MODE S TEST SYSTEM CONTAINS PARTS SENSITIVE TO DAMAGE BY ELECTROSTATIC DISCHARGE (ESD). ALL PERSONNEL PERFORMING CALIBRATION/VERIFICATION SHOULD HAVE KNOWLEGE OF ACCEPTED ESD PRACTICES AND/OR BE ESD CERTIFIED.

(2) Environmental Considerations

For best results, the calibration environmental conditions should be identical to the environmental conditions at the normal operating location.

E. Test Record

A Calibration/Verification Data Sheet is provided for recording the results obtained while performing the Calibration/Verification Procedures.

NOTE: It is recommended the technician reproduce copies of the Calibration/Verification Data Sheet, rather than use the copy in this manual.

F. Calibration/Verification Procedures

NOTE: When one circuit provides the same pulse characteristic for different pulses, it is necessary to test the specifications for that characteristic only once.

NOTE: Pulse spacings are measured from leading edge to leading edge at the 50% amplitude points. Pulse widths are measured from leading edge to trailing edge at the 50% amplitude points.

Refer to 2-2-2, Figure 18 for S-1403C Test and Adjustment Points not shown in 1-2-2, Figure 6 in the S-1403C Operation Manual. Refer to ATC-1400A Maintenance Manual for ATC-1400A Test and Adjustment Points.

(1) Power Supply

PREREQUISITES: None

TEST EQUIPMENT: 1 Digital Multimeter

STEP	PROCEDURE

1. Apply power to Mode S Test System.
2. Use Digital Multimeter (DMM) to measure voltage across C11007 on Pulse PC Board Assembly. Refer to Pulse PC Board Assembly drawing.
3. Verify voltage measures +5 Vdc (±0.05 Vdc). If not, adjust R17037 (+5 V Adjust) on Power Supply Assembly to obtain proper level.
4. Use DMM to measure voltage between FL31009 on Modulator Assembly and Ground Bus.
5. Verify voltage measures +12 Vdc (±0.05 Vdc). If not, adjust R17020 (+12 V Adjust) on Power Supply Assembly to obtain proper level.
6. Use DMM to measure voltage between FL31010 on Modulator Assembly and Ground Bus.
7. Verify voltage measures -12 Vdc (±0.25 Vdc). If not, adjust R17020 (+12 V Adjust) on Power Supply Assembly to obtain proper level.
8. Use DMM to measure voltage between +40 V Bus and Ground Bus on Power Supply Assembly.
9. Verify voltage measures +40 Vdc (±5 Vdc). If not, adjust R17020 (+12 V Adjust) on Power Supply Assembly to obtain proper level.

   NOTE: If R17020 is adjusted in Steps 7 and/or 9, Steps 4 through 9 must be repeated.

10. Disconnect power from Mode S Test System.

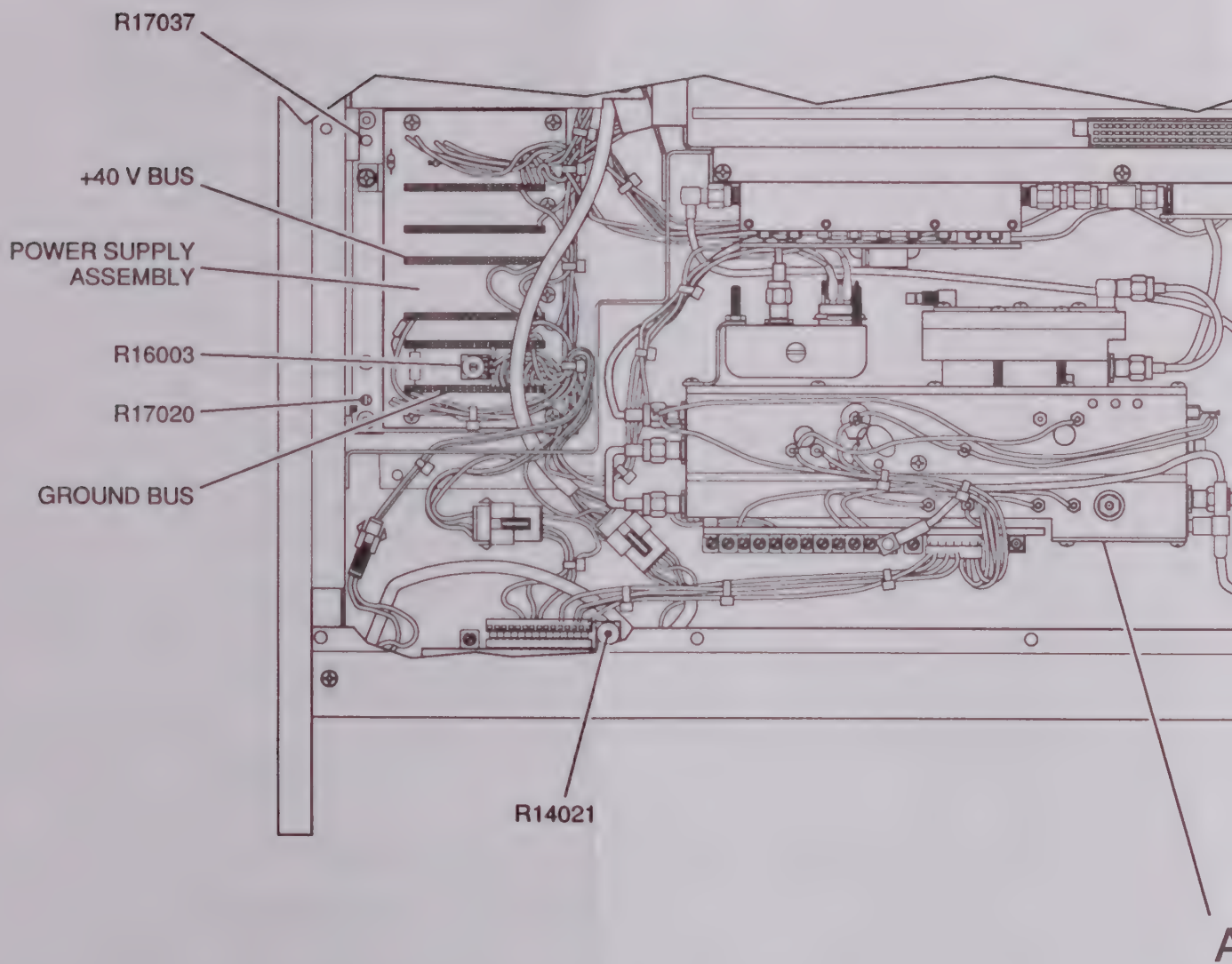
R17037
+40 V BUS
POWER SUPPLY ASSEMBLY
R16003
R17020
GROUND BUS
R14021

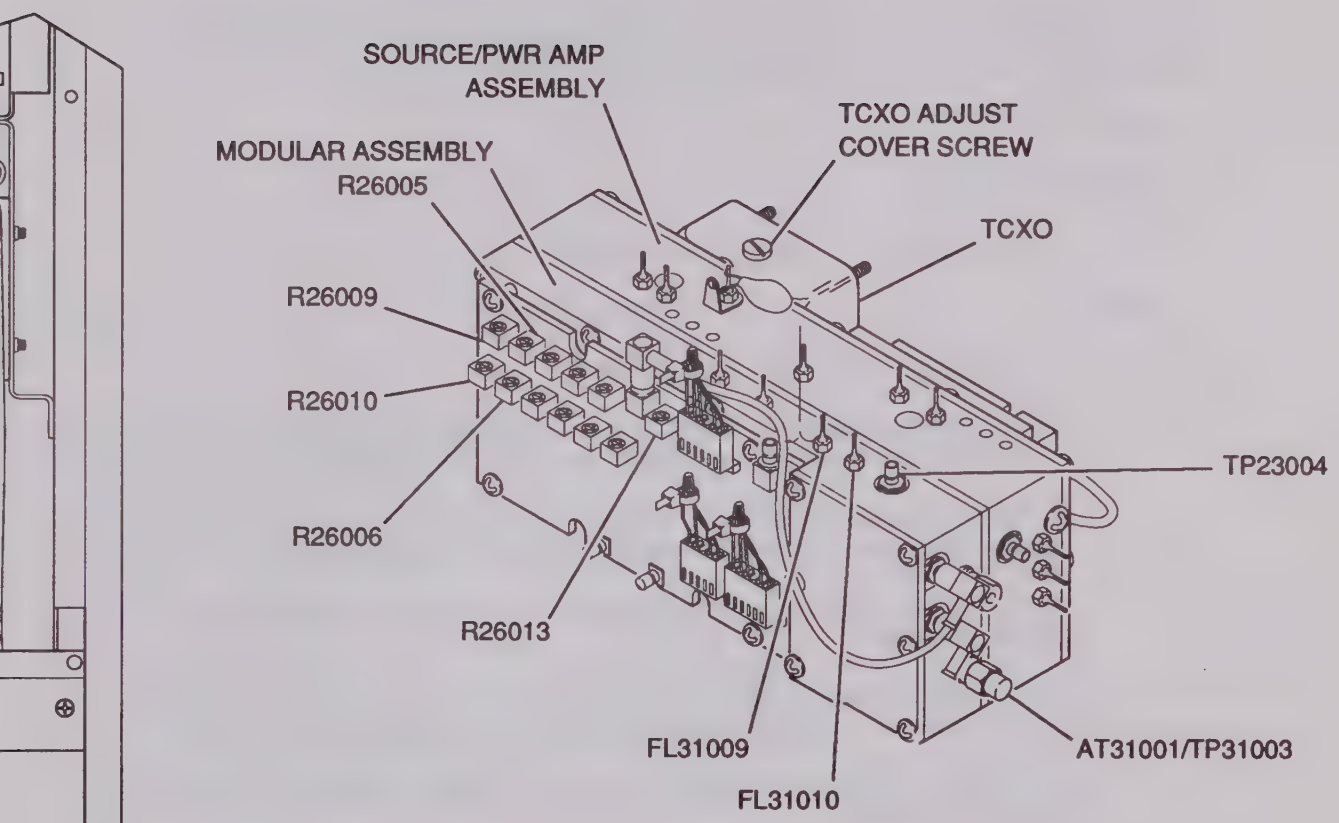

DIVERSITY MODULE

DETAIL A

8807007

Test Points and Adjustments
Figure 18

(2) Interrogation Pulses and SPR

This procedure tests the operation of P_1, P_2, P_2 (SLS), P_3, P_4, P_5 (SLS) and P_6 Pulses; and SPR.

PREREQUISITES: 2-2-2G(1) Power Supply

TEST EQUIPMENT:
1 Oscilloscope
1 Heterodyne Monitor
1 RF Signal Generator

TEST SETUP DIAGRAM:

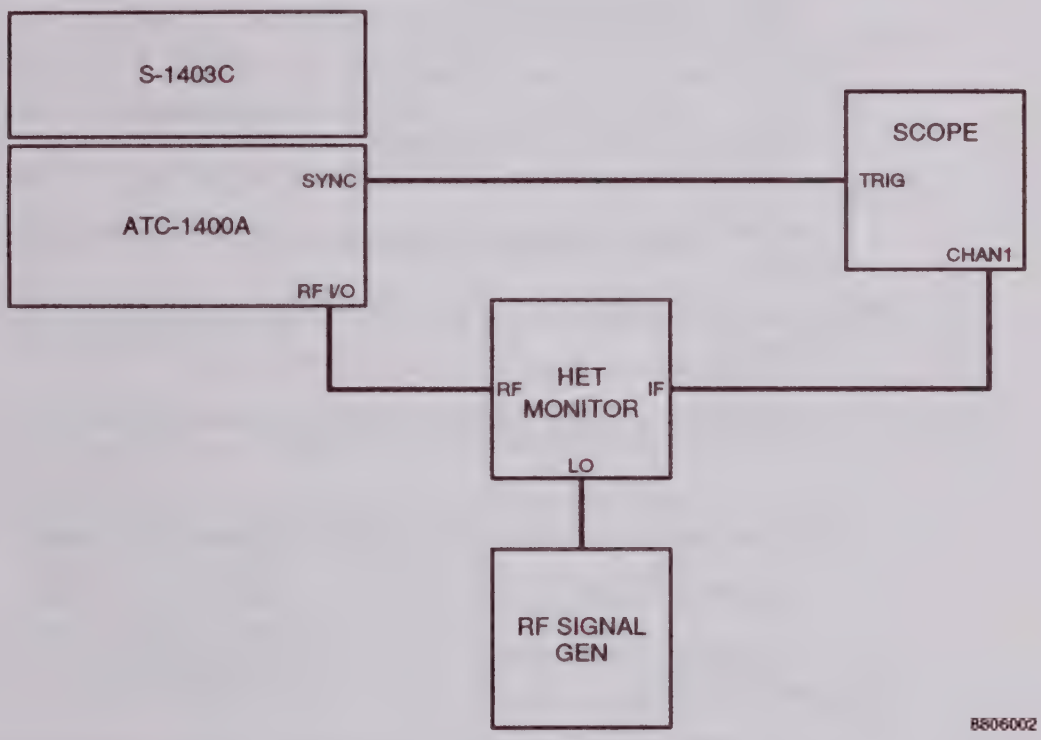

Interrogation Pulses and SPR Test Setup Diagram
Figure 19

STEP	PROCEDURE

1. Connect Oscilloscope Channel 1 to Heterodyne Monitor IF Connector.
2. Connect Oscilloscope External Trigger to SYNC Connector (29).
3. Connect RF I/O Connector (9) to Heterodyne Monitor RF Connector.
4. Connect RF Signal Generator to Heterodyne Monitor LO Connector.
5. Apply power to Mode S Test System and test equipment.
6. Set RF Signal Generator output for 1030 MHz at +6 dBm.

STEP PROCEDURE

7. Set Mode S Test System as follows:

	CONTROL	SETTING
(6)	RF LEVEL Control	***12*** (-dBm)
(7)	CW/NORM/OFF Switch	***NORM***
(18)	SLS/ECHO ON/OFF Switch	***OFF***
(20)	XPDR PULSE WIDTH VAR/CAL Switch	***CAL***
(25)	XPDR DEV P_3/CAL Switch	***CAL***
(28)	XPDR DEV P_2/CAL Switch	***CAL***
(30)	T_O/TAC/T_D Switch	***To***
(32)	PRF SQUITTER ON/OFF Switch	***ON***
(38)	XPDR MODE Control	***A***
(41)	PRF/SQTR Thumbwheels	***200***
(45)	FREQ/FUNCTION SELECT Thumbwheels	***1030 XPDR***
(50)	SLS ECHO Thumbwheels	***-0***
(I)	MENU Display (Control Menu #1)	***Func: (1) ATC***

8. Adjust Vertical Vernier Control on Oscilloscope for full display of P_1 pulse.

9. Verify P_1 pulse rise and fall time, from 10% point to 90% point, is 70 ns (±20 ns).

10. Using Oscilloscope Δtime start and stop controls, overlay leading and trailing edge of P_1 pulse at 50% point.

11. Verify P_1 pulse width is 0.80 µs (±10 ns). If not, adjust R2603 (XPDR Pulse Width Adjust) on ATC-1400A RF Control PC Board Assembly.

12. Set XPDR PULSE WIDTH VAR/CAL Switch (20) to ***VAR***.

13. Set XPDR PULSE WIDTH Thumbwheels (49) to ***0.20*** µs. Verify P_1 pulse width is 0.20 µs (±10 ns).

14. Set XPDR PULSE WIDTH Thumbwheels (49) to ***1.85*** µs. Verify P_1 pulse width is 1.85 µs (±10 ns).

15. Set XPDR PULSE WIDTH VAR/CAL Switch (20) to ***CAL***.

16. Verify XPDR pulse spacing, displayed on Oscilloscope for each XPDR MODE Control (38) setting, as follows:

POSITION	PULSE SPACING
Mode ***1***	3.00 µs (±10 ns)
Mode ***2***	5.00 µs (±10 ns)
Mode ***T***	6.50 µs (±10 ns)
Mode 3/***A***	8.00 µs (±10 ns)
Mode ***B***	17.00 µs (±10 ns)
Mode ***C***	21.00 µs (±10 ns)
Mode ***D***	25.00 µs (±10 ns)

17. Set XPDR MODE Control (38) to ***A***.

STEP	PROCEDURE

18. Verify P_3 pulse width is 0.8 µs (±10 ns).

19. Set ***Func: (3) ACS***. Verify P_1 to P_3 pulse spacing is 8.0 µs (±10 ns).

20. Verify P_1 to P_4 pulse spacing is 10.0 µs (±10 ns).

21. Verify ***P4:,Wd= CAL***. Verify P_4 pulse width is 0.8 µs (±50 ns).

22. Position cursor to ***P4:,Wd=***. Press ON/CAL Key. Verify numerical value is displayed.

23. Using SLEW Control (F), verify P_4 pulse width varies from 200 ns (±50 ns) to 2.75 µs (±50 ns).

24. Press ON/CAL Key.

25. Set ***Func: (4) ACL***. Verify P_1 to P_3 pulse spacing is 8.0 µs (±10 ns).

26. Verify P_1 to P_4 pulse spacing is 10.0 µs (± 10 ns).

27. Position cursor to ***P4:,Wd=***. Verify P_4 pulse width is 1.6 µs (±50 ns).

28. Press ON/CAL Key. Verify numerical value is displayed.

29. Using SLEW Control (F), verify P_4 pulse width varies from 200 ns (±50 ns) to 3.55 µs (±50 ns).

30. Set XPDR MODE Control (38) to ***C***.

31. Verify P_1 to P_3 pulse spacing is 21.0 µs (±10 ns).

32. Verify P_1 to P_4 pulse spacing is 23.0 µs (±10 ns).

33. Set ***Func: (3) ACS***. Verify P_1 to P_3 spacing is 21.0 µs (±10 ns).

34. Verify P_1 to P_4 pulse spacing is 23.0 µs (±10 ns).

35. Set ***Func: (1) ATC***.

36. Set XPDR P_2/P_3 DEV Thumbwheels (44) to ***1.85***.

37. Set XPDR DEV P_3/CAL Switch (25) to ***+Δ***. Verify P_1 to P_3 pulse spacing is 22.85 µs (± 10 ns).

38. Set XPDR DEV P_3/CAL Switch (25) to ***-Δ***. Verify P_1 to P_3 pulse spacing is 19.15 µs (± 10 ns).

39. Set XPDR P_3/CAL Switch (25) to ***CAL***.

40. Set SLS/ECHO ON/OFF Switch (18) to ***ON***.

41. Set SLS/ECHO Thumbwheels (50) to ***+5***.

STEP PROCEDURE

42. Verify P_2 has shifted +5 dB (±0.5 dB) from P_1.

43. Set SLS/ECHO ON/OFF Switch (18) to ***OFF***.

44. Set ***P3:VAR***.

45. Set SLS/ECHO Thumbwheels (50) to ***-19***.

46. Verify P_3 has shifted -19 dB (±0.5 dB) from P_1.

47. Set SLS/ECHO Thumbwheels (50) to ***-10***.

48. Verify P_3 is -10 dB (±0.3 dB) relative to P_1.

49. Set SLS/ECHO Thumbwheels (50) to ***+6***.

50. Verify P_3 has shifted +6 dB (±0.5 dB) relative to P_1.

51. Set SLS/ECHO Thumbwheels (50) to ***00***.

52. Verify P_3 amplitude is 0.0 dB (±0.3 dB) relative to P_1.

53. Set ***P3:CAL***.

54. Set ***Func: (2) SEQ***.

55. Press SMENU Key.

56. Use SLEW Control (F) to change to Sequence Menu S02. Press ON/CAL Key to set ***S02:OFF***.

57. Repeat Step 56 for Sequence Menus S03 through S08.

58. Use SLEW Control (F) to return to Sequence Menu S01.

59. Set ***UF# 04*** and ***ADD=17725762***.

60. Verify P_6 has level amplitude peaks per 2-2-2, Figure 20. If not, adjust R11026 (DPSK AMPLITUDE BALANCE Adjust [P]) on Pulse PC Board Assembly, to level peaks.

61. Set ***UF#16***. Verify P_6 width is 30.25 µs (±50 ns).

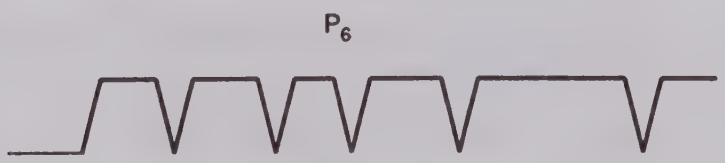

P_6 Amplitude Example
Figure 20

STEP PROCEDURE

62. Set ***UF#00***. Verify P_6 width is 16.25 µs (±50 ns).

63. Press CMENU and "1" Keys in sequence. Verify Control Menu #1 with ***Func: (2) SEQ*** is displayed.

64. Verify P_1 to P_6 pulse spacing is 3.5 µs (±10 ns).

65. Position cursor to ***P6:,Wd=*** field.

66. Press ON/CAL Key. Verify numerical value is displayed.

67. Using SLEW Control (F), verify P_6 width varies from 14.75 µs (±50 ns) to 17.75 µs (±50 ns) in 50 ns steps from CAL position.

68. Verify P_1 to P_2 pulse spacing is 2.0 µs (±10 ns).

69. Verify P_2 pulse width is 0.80 µs (±10 ns).

70. Set ***P6:OFF***.

71. Set XPDR DEV P_2/CAL Switch (28) to +Δ. Set XPDR P_2/P_3 Thumbwheels (44) to ***1.85***. Verify P_1 to P_2 pulse spacing is 3.85 µs (±10 ns).

72. Set XPDR DEV P_2/CAL Switch (28) to -Δ. Verify P_1 with P_2 merged pulse width is 0.15 µs + P_2 pulse width in Step 69 (±10 ns). (Actual P_1 to P_2 pulse spacing is measured value minus P_2 pulse width.)

73. Set XPDR DEV P_2/CAL Switch (28) to ***CAL***.

74. Set ***P6:CAL***.

75. Verify SYNC PHASE REVERSAL (SPR) occurs 2.75 µs (±50 ns) following leading edge of P_2. Refer to 2-2-2, Figure 21. If not, adjust R12007 (SPR TIMING Adjust [U]) on Processor PC Board Assembly, to position SPR.

76. Verify SPR and all P_6 phase transition times are less than 80 ns at 80% points.

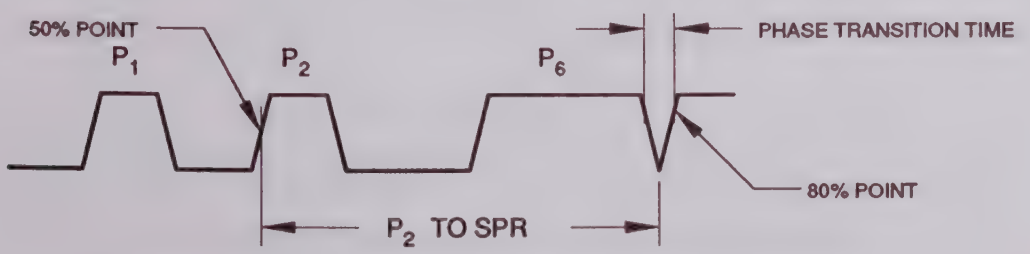

P_2 to SPR Spacing/Phase Transition Time
Figure 21

STEP	PROCEDURE

77. Position cursor to ***SPR:Dv=*** field. Press ON/CAL Key. Verify numerical value is displayed.

78. Using SLEW Control (F), verify SPR occurs from 1.75 µs (±50 ns) to 3.75 µs (±50 ns) following leading edge of P_2.

79. Set ***SPR:Dv=CAL***.

80. Set SLS/ECHO ON/OFF Switch (18) to ***ON***.

81. Set ***P6:OFF***.

82. Using Oscilloscope Δtime start control, center 50% point of leading edge of P_5 on Major Vertical.

83. Set SLS/ECHO ON/OFF Switch (18) to ***OFF***.

84. Set ***P6:CAL***.

85. Using Oscilloscope Δtime stop control, center SPR on Major Vertical. Verify Δtime reading (P_5 leading edge to SPR) is 400 ns (±100 ns).

86. Using Oscilloscope Δtime start control, center SPR on Major Vertical.

87. Set ***P6:OFF***.

88. Set SLS/ECHO ON/OFF Switch (18) to ***ON***.

89. Using Oscilloscope Δtime stop control, center 50% point of P_5 trailing edge on Major Vertical. Verify Δtime reading (SPR to P_5 trailing edge) is 400 ns (±100 ns).

90. Add readings from Steps 85 and 89 together and verify P_5 pulse width is 800 ns (±100 ns).

91. Remove power and disconnect test equipment.

(3) Suppressor and Interference Pulses

PREREQUISITES: 2-2-2G(1) Power Supply

TEST EQUIPMENT:
1 Oscilloscope
1 Heterodyne Monitor
1 RF Signal Generator

TEST SETUP DIAGRAM:

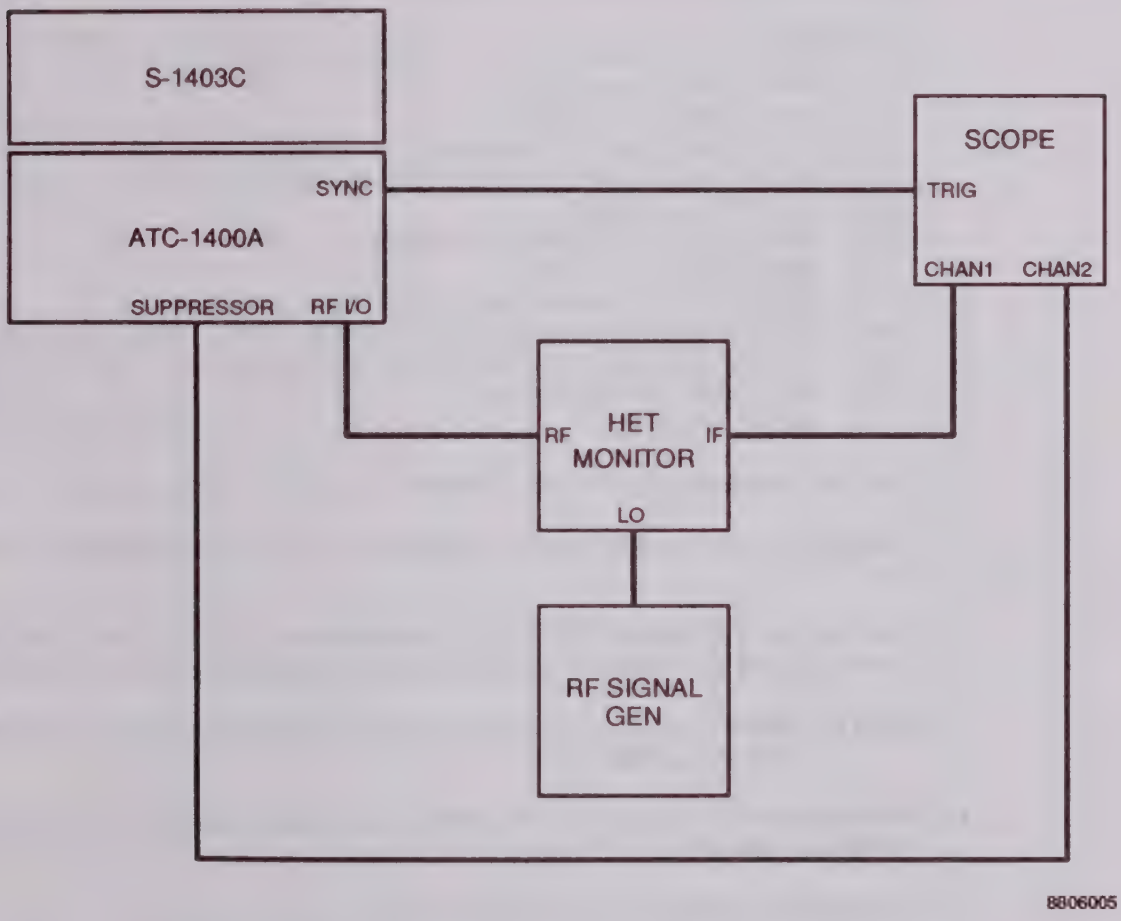

Suppressor and Interference Pulses Test Setup Diagram
Figure 22

STEP	PROCEDURE

1. Connect Oscilloscope Channel 1 to Heterodyne Monitor IF Connector.
2. Connect Oscilloscope External Trigger to SYNC Connector (29).
3. Connect Oscilloscope Channel 2 to SUPPRESSOR OUTPUT Connector (16).
4. Connect RF I/O Connector (9) to Heterodyne Monitor RF Connector.

STEP PROCEDURE

5. Connect RF Signal Generator to Heterodyne LO Connector.

6. Apply power to Mode S Test System and test equipment.

7. Set RF Signal Generator output for 1030 MHz at +6 dBm.

8. Set Mode S Test System as follows:

CONTROL		SETTING
(6)	RF LEVEL Control	***12*** (-dBm)
(7)	CW/NORM/OFF Switch	***NORM***
(18)	SLS/ECHO ON/OFF Switch	***OFF***
(20)	XPDR PULSE WIDTH VAR/CAL Switch	***CAL***
(30)	T_O/TAC/T_D Switch	***T_O***
(32)	PRF SQUITTER ON/OFF Switch	***ON***
(38)	XPDR MODE Control	***A***
(41)	PRF/SQTR Thumbwheels	***200***
(42)	DBL INTERR/INTRF PULSE Thumbwheels	***017.5 INTERF-***
(45)	FREQ/FUNCTION SELECT Thumbwheels	***1030 XPDR***
(50)	SLS ECHO Thumbwheels	***-0***
(I)	MENU Display	***Func: (1) ATC***

9. Adjust Oscilloscope Vertical Vernier Control for full display of P_1 pulse.

10. Verify an interference pulse is positioned 17.5 µs (±0.0509 µs) prior to P_1.

11. Set DBL INTERR/INTRF PULSE Thumbwheels (42) to ***399.0 INTERF+***. Verify a pulse is positioned 399 µs (±0.07 µs) after leading edge of P_1.

    NOTE: Oscilloscope errors may contribute significantly to accuracy of this measurement.

12. Rotate INTRF PULSE WIDTH Control (31) fully ccw and cw. Verify pulse width can be adjusted from 0.2 to 5.0 µs.

13. Set ***Func: (6) DI, 1st=ATC, 2nd=ATC***.

14. Set DBL INTERR/INTRF PULSE Thumbwheels (42) to ***200.0 DOUBLE***. Verify leading edge of P_1 in second interrogation is positioned 200 µs (±50 ns) after leading edge of P_1 in first interrogation.

15. Set SUPPRESSOR ON/OFF Switch (17) to ***ON***. Verify suppression pulse removes first interrogation and shifts second interrogation by mode spacing.

16. Set DBL INTERR/INTRF PULSE Thumbwheels (42) to ***000.0 OFF***.

17. Set ***Func: (1) ATC***.

18. Verify suppression pulse occurs 800 ns (±100 ns) prior to P_3.

STEP	PROCEDURE

19. Set ***Func: (2) SEQ***. Verify pulse occurs 800 ns (±100 ns) prior to SPR.

20. Set ***Func: (3) ACS***. Verify pulse occurs 800 ns (±100 ns) prior to P_3.

21. Set ***Func: (4) ACL***. Verify pulse occurs 800 ns (±100 ns) prior to P_3.

22. Remove power and disconnect test equipment.

(4) RF Level

PREREQUISITES: 2-2-2G(1) Power Supply

TEST EQUIPMENT: 1 Spectrum Analyzer
1 Power Meter

STEP PROCEDURE

1. Apply power to Mode S Test System and test equipment.

2. Set Mode S Test System as follows:

CONTROL		SETTING
(6)	RF LEVEL Control	***00*** (-dBm)
(7)	CW/NORM/OFF Switch	***CW***
(18)	SLS/ECHO ON/OFF Switch	***OFF***
(22)	MAN/AUTO/MAN STEP Switch	***MAN***
(32)	PRF SQUITTER ON/OFF Switch	***ON***
(38)	XPDR MODE Control	***2***
(41)	PRF/SQTR Thumbwheels	***1200***
(45)	FREQ/FUNCTION SELECT Thumbwheels	***1030 XPDR***
(49)	XPDR PULSE WIDTH Thumbwheels	***1.85***
(I)	MENU Display	***RFLvl:+0.0***

3. Connect Power Meter to RF I/O Connector (9).

4. Disconnect cable from J10013 on rear panel of S-1403C.

5. Record Power Meter reading for reference.

6. Reconnect cable to J10013. Verify power reading changes less than 0.05 dB. If not, adjust R11023 (ZERO SCALE Adjust [W]) on Pulse PC Board Assembly to reference level from Step 5.

7. Set ***RFLvl:+3.0*** and verify increase of +3.0 dB (±0.3 dB) from Step 5 reference level. If not, adjust R11021 (FULL SCALE Adjust [X]) on Pulse PC Board Assembly.

8. Set ***RFLvl:-3.0*** and verify decrease of 3.0 dB (±0.3 dB) from Step 5 reference level. If not, adjust R11021 (FULL SCALE Adjust [X]).

9. Set ***RFLvl:+0.0*** and verify reference level (±0.05 dB). If not, or if any adjustments were made in Steps 7 or 8, repeat Steps 6 through 9 until no adjustments are necessary.

10. Rotate RF LEVEL Control (6) until ***50*** (-dBm) or ***20*** (-dBm) (if Multi-Level Diversity option is installed) is displayed on RF LEVEL -dBm Display (3).

11. Disconnect Power Meter from RF I/O Connector (9).

12. Connect Spectrum Analyzer to RF I/O Connector (9).

13. Set CW/NORM/OFF Switch (7) to ***NORM***.

STEP	PROCEDURE

14. Set Spectrum Analyzer to Zero Span, with widest possible IF and VIDEO Filters selected. Adjust Spectrum Analyzer trigger for stable display of P_1 and P_3.

15. Record signal level on Spectrum Analyzer for reference.

16. Connect ANT B Connector (E) to Spectrum Analyzer.

17. Verify signal level equals reference level noted in Step 15 (±1 dB). If not, adjust R26013 (RF Level Adjust) on Modulator Assembly.

    NOTE: Steps 18 through 26 only apply if MLD option is installed.

18. Set CW/NORM/OFF Switch (7) to ***CW***.

19. Disconnect Spectrum Analyzer from ANT B Connector (E).

20. Connect Power Meter to ANT B Connector (E).

21. Press C MENU and "2" Keys in sequence. Verify Control Menu #2 is displayed.

22. Set ***Brf= -20 dBm*** and ***Brflv=+0.0 dB***. Verify Power Meter reading is -20 dBm (±1 dB). Record signal level for a reference.

23. Set ***Brflv=+3.0 dB***. Verify Power Meter reading is reference level from Step 22 + 3.0 dB (±0.3 dB). If not, adjust R14021 on Front Panel Processor PC Board. Refer to 1-2-1, Figure 2 in Mode S Test System Operation Manual.

24. Set ***Brflv=-3.0 dB***. Verify Power Meter reading is reference level from Step 22 - 3.0 dB (±0.3 dB). If not, adjust R14021. Refer to 1-2-1, Figure 2 in Mode S Test System Operation Manual.

25. Repeat Steps 23 and 24 until no adjustments are required.

26. Remove power and disconnect test equipment.

(5) Antenna B

PREREQUISITES: 2-2-2G(1) Power Supply

TEST EQUIPMENT:
1 Oscilloscope
1 Heterodyne Monitor
1 Frequency Counter
1 RF Signal Generator
1 DMM

TEST SETUP DIAGRAM:

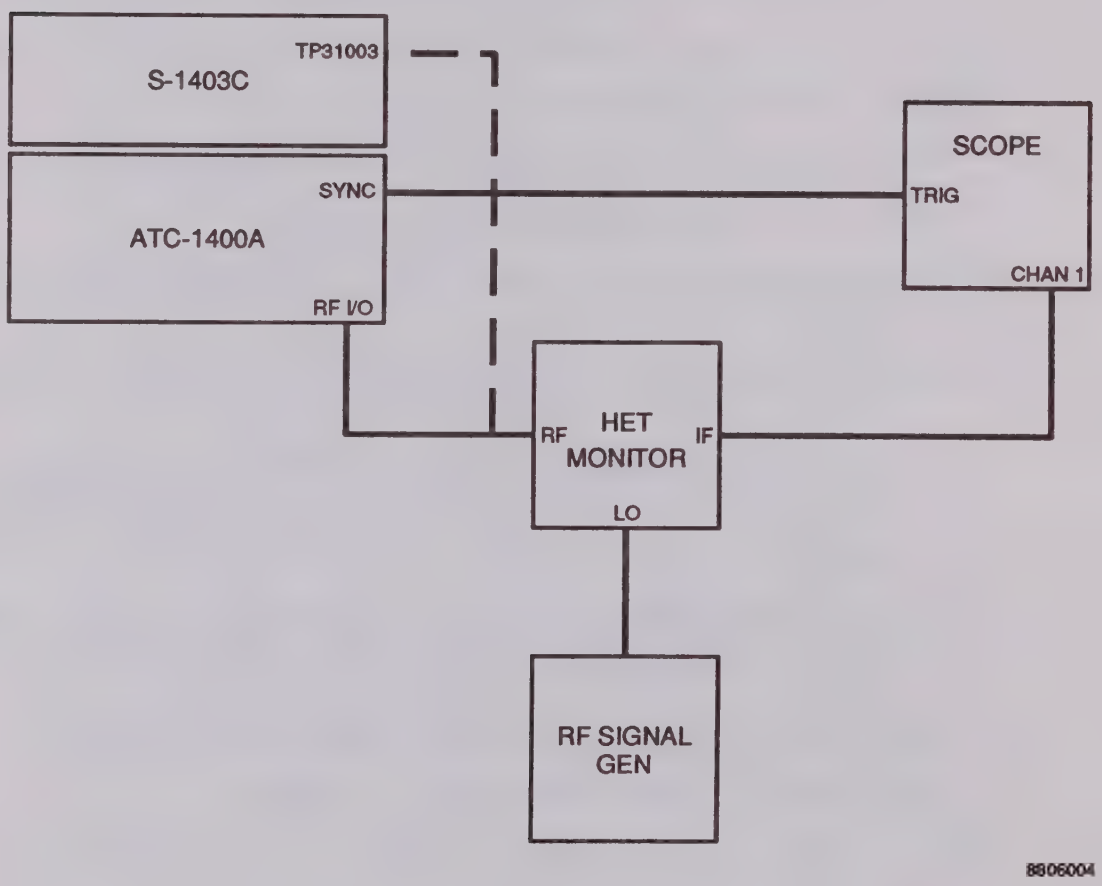

Antenna B Test Setup Diagram
Figure 23

STEP	PROCEDURE

1. Connect Oscilloscope External Trigger to SYNC Connector (29).
2. Connect Oscilloscope Channel 1 to Heterodyne Monitor IF Connector.
3. Connect Heterodyne Monitor RF Connector to RF I/O Connector (9).

STEP PROCEDURE

4. Connect RF Signal Generator to Heterodyne Monitor LO Connector.

5. Apply power to Mode S Test System and test equipment.

6. Set RF Signal Generator output for 1030 MHz at +6 dBm.

7. Set Mode S Test System as follows:

CONTROL		SETTING
(7)	CW/NORM/OFF Switch	***NORM***
(18)	SLS/ECHO ON/OFF Switch	***OFF***
(20)	XPDR PULSE WIDTH VAR/CAL Switch	***CAL***
(21)	FREQ STEP RATE Control	***OFF***
(22)	MAN/AUTO/MAN STEP Switch	***MAN***
(25)	XPDR DEV P_3/CAL Switch	***CAL***
(28)	XPDR DEV P_2/CAL Switch	***CAL***
(30)	T_O/TAC/T_D Switch	***To***
(32)	PRF SQUITTER ON/OFF Switch	***ON***
(38)	XPDR MODE Control	***A***
(41)	PRF/SQTR Thumbwheels	***200***
(45)	FREQ/FUNCTION SELECT Thumbwheels	***1030 XPDR***
(50)	SLS ECHO Thumbwheels	***-0***
(I)	MENU Display	***Func: (1) ATC***

8. Press SMENU Key.

9. Use SLEW Control (F) to select Sequence Menu S02. Press ON/CAL Key to set ***S02:OFF***.

10. Repeat Step 9 for Sequence Menus S03 through S08.

11. Press CMENU, 2nd, FUN NO and "1" Keys in sequence.

12. Set Oscilloscope for 2 µs/Div resolution. Use Oscilloscope Δtime to record time from sync to P_1 of ATC-1400A.

13. Set ***AntB: ON***. Remove AT31001 termination and connect Heterodyne Monitor RF IN to TP31003 on Modulator Assembly. Adjust Oscilloscope for full screen display.

14. Use Oscilloscope Δtime to verify time from sync to P_1 is equal to time recorded in Step 12 (±25 ns). If not, adjust R26010 on Modulator Assembly.

15. Verify P_1 has a pulse width of 800 ns (±10 ns). If not, adjust R26009 on Modulator Assembly.

16. Verify SPR occurs 2.75 µs (±10 ns) following leading edge of P_2. If not, adjust R26006 on Modulator Assembly.

STEP PROCEDURE

17. If R26006 was adjusted in Step 15, adjust R26005 on Modulator Assembly to set time from SPR to second phase transition at 1.0 µs (±10 ns).

18. Press ON/CAL Key. Use SLEW Control (F) to set ***AntB=+0.95***. Press ENT Key.

19. Verify P_1 pulse has shifted +950 ns (±50 ns) from position in Step 14.

20. Press +/- Key. Verify P_1 pulse has shifted -950 ns (±50 ns) from position in Step 14.

21. Set CW/NORM/OFF Switch (7) to ***CW***.

22. Connect Frequency Counter to TP31003 on Modulator Assembly.

23. Verify frequency measured is 1030 MHz (±10 kHz). If correct, this concludes Antenna B procedure. If incorrect, continue with Step 24.

    NOTE: If measured frequency is more than 20 kHz out of tolerance, contact IFR Customer Service for further instructions.

24. Use DMM to verify voltage between R16003 wiper on Power Supply and Ground Bus is 6.0 Vdc (±0.5 Vdc). If not, adjust R16003 to proper voltage level.

25. Set course adjustment on TCXO (underneath TCXO Adjust Cover Screw) for 1030 MHz (±400 Hz).

26. Readjust R16003 to set frequency at 1030 MHz (±50 Hz).

27. Remove power and disconnect test equipment.

(6) Reply Delay and PPMG

PREREQUISITES: 2-2-2G(1) Power Supply

TEST EQUIPMENT: 1 Oscilloscope
1 Heterodyne Monitor
1 Dual Pulse Generator
1 RF Signal Generator

TEST SETUP DIAGRAM:

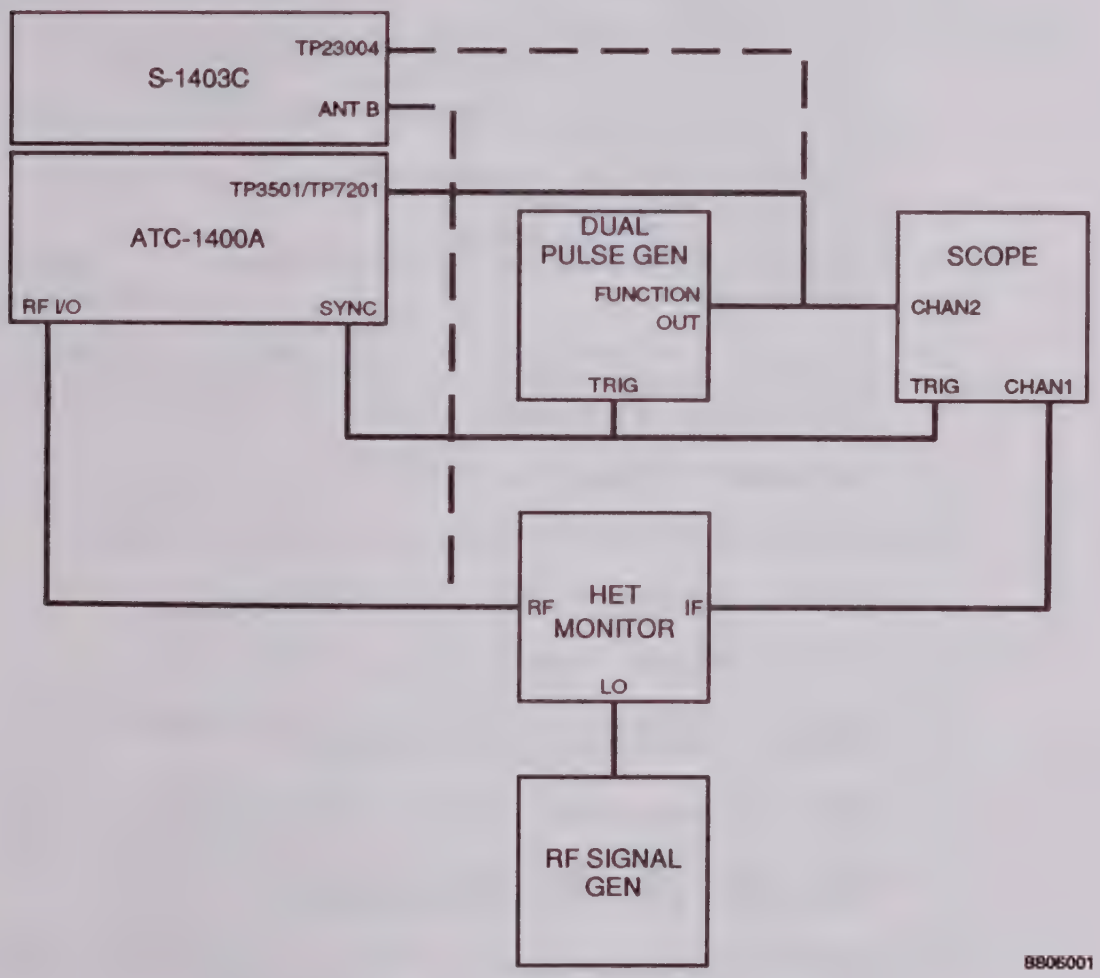

Reply Delay and PPG Test Setup Diagram
Figure 24

STEP	PROCEDURE

1. Connect Oscilloscope External Trigger and Dual Pulse Generator Trigger to SYNC Connector (29).

2. Connect Oscilloscope Channel 1 to Heterodyne Monitor IF Connector.

STEP PROCEDURE

3. Connect Heterodyne Monitor RF Connector to RF I/O Connector (9).

4. Connect RF Signal Generator to Heterodyne Monitor LO Connector.

5. Set Mode S Test System as follows:

	CONTROL	SETTING
(7)	CW/NORM/OFF Switch	***NORM***
(18)	SLS/ECHO ON/OFF Switch	***OFF***
(20)	XPDR PULSE WIDTH VAR/CAL Switch	***CAL***
(22)	MAN/AUTO/MAN STEP Control	***MAN***
(25)	XPDR DEV P_3/CAL Switch	***CAL***
(30)	T_O/TAC/T_D Switch	***To***
(32)	PRF SQUITTER ON/OFF Switch	***ON***
(38)	XPDR MODE Control	***A***
(41)	PRF/SQTR Thumbwheels	***200***
(45)	FREQ/FUNCTION SELECT Thumbwheels	***1030 XPDR***
(I)	MENU Display	***Func: (1) ATC***

6. Remove 50 Ω Termination from TP3501/TP7201 on ATC-1400A Video Detector PC Board Assembly. Connect Dual Pulse Generator to TP7201/TP3501 and Oscilloscope Channel 2.

7. Apply power to Mode S Test System and test equipment.

8. Set RF Signal Generator output for 1030 MHz at +6 dBm.

9. Set Pulse Generator for 20.3 µs two pulse reply.

10. Set delay between P_3 and F_1 to approximately 3.0 µs.

11. Adjust Pulse Generator Amplitude for an approximate 100 W and note reading on XMTR PWR WATTS Display (1).

12. Use Oscilloscope Δtime to measure delay time between P_3 and F_1.

13. Verify ***RpDly:*** field value equals Δtime reading (±100 ns). If not, adjust R12006 (ANT A REPLY DELAY Adjust [T]).

14. Set F_2/P_2 F_1/P_1 Switch (34) to ***F_2/P_2***. Verify XMTR PWR WATTS Display (1) has not changed from value in Step 11.

15. Press 2nd and PPG Keys in sequence. Using SLEW Control (F), select ***f_2*** in ***Pulse Power Gate:*** field.

16. Verify value displayed in XMTR PWR WATTS Display (1) has not changed greater than 10% from value in Step 14.

17. Use SLEW Control (F) to select ***spl*** in ***Pulse Power Gate:*** field.

18. Verify XMTR POWER WATTS Display (1) reads ***0***.

STEP	PROCEDURE

19. Disconnect Dual Pulse Generator from TP3501/TP7201 and replace 50 Ω Termination. Connect Dual Pulse Generator (still connected to Oscilloscope) to TP23004 on S-1403C Modulator Assembly.

20. Disconnect Heterodyne Monitor RF IN from RF I/O Connector (9). Connect Heterodyne Monitor RF IN to ANT B Connector (E).

21. Use Oscilloscope Δtime to measure delay time between P_3 and F_1.

22. Verify ***RpDly:*** field value equals Δtime reading (±100 ns). If not, adjust R12005 (ANT B REPLY DELAY Adjust [S]).

23. Remove power and disconnect test equipment.

G. Calibration/Verification Data Sheet

TECHNICIAN: _____ DATE: _____

ATC-1400A S/N: _____ S-1403C S/N: _____

STEP	DATA	RESULT
(1)	**Power Supply**	
3.	+5 Vdc (+4.95 to +5.05 Vdc)	_____
5.	+12 Vdc (+11.95 to +12.05 Vdc)	_____
7.	-12 Vdc (-12.25 to -11.75 Vdc)	_____
9.	+40 Vdc (+35.0 to +45.0 Vdc)	_____
(2)	**Interrogation Pulses and SPR**	
9.	P_1 Rise Time 70 ns (50 to 90 ns)	_____
	P_1 Fall Time 70 ns (50 to 90 ns)	_____
11.	P_1 Pulse Width 0.80 µs (0.79 to 0.81 µs)	_____
13.	P_1 VAR Width (MIN) 0.20 µs (0.19 to 0.21 µs)	_____
14.	P_1 VAR Width (MAX) 1.85 µs (1.84 to 1.86 µs)	_____
16.	Mode 1 Spacing 3.00 µs (2.99 to 3.01 µs)	_____
	Mode 2 Spacing 5.00 µs (4.99 to 5.01 µs)	_____
	Mode T Spacing 6.50 µs (6.49 to 6.51 µs)	_____
	Mode 3/A Spacing 8.00 µs (7.99 to 8.01 µs)	_____
	Mode B Spacing 17.00 µs (16.99 to 17.01 µs)	_____
	Mode C Spacing 21.00 µs (20.99 to 21.01 µs)	_____
	Mode D Spacing 25.00 µs (24.99 to 25.01 µs)	_____
18.	ATC (A) P_3 Pulse Width 0.80 µs (0.79 to 0.81 µs)	_____
19.	ACS (A) P_1 to P_3 Pulse Spacing 8.00 µs (7.99 to 8.01 µs)	_____
20.	ACS (A) P_1 to P_4 Pulse Spacing 10.00 µs (9.99 to 10.01 µs)	_____

STEP	DATA	RESULT
21.	ACS (A) P_4 Pulse Width 0.80 µs (0.79 to 0.81 µs)	_____
23.	ACS (A) P_4 Pulse Width (MIN) 200 ns (150 to 250 ns)	_____
	ACS (A) P_4 Pulse Width (MAX) 2.75 µs (2.70 to 2.80 µs)	_____
25.	ACL (A) P_1 to P_3 Pulse Spacing 8.00 µs (7.99 to 8.01 µs)	_____
26.	ACL (A) P_1 to P_4 Pulse Spacing 10.00 µs (9.99 to 10.01 µs)	_____
27.	ACL (A) P_4 Pulse Width 1.60 µs (1.55 to 1.65 µs)	_____
29.	ACL (A) P_4 Pulse Width (MIN) 200 ns (150 to 250 ns)	_____
	ACL (A) P_4 Pulse Width (MAX) 3.55 µs (3.50 to 3.60 µs)	_____
31.	ACL (C) P_1 to P_3 Pulse Spacing 21.00 µs (20.99 to 21.01 µs)	_____
32.	ACL (C) P_1 to P_4 Pulse Spacing 23.00 µs (22.99 to 23.01 µs)	_____
33.	ACS (C) P_1 to P_3 Pulse Spacing 21.00 µs (20.99 to 21.01 µs)	_____
34.	ACS (C) P_1 to P_4 Pulse Spacing 23.00 µs (22.99 to 23.01 µs)	_____
37.	ATC (C) P_1 to P_3 Pulse Spacing (+Δ) 22.85 µs (22.84 to 22.86 µs)	_____
38.	ATC (C) P_1 to P_3 Spacing (-Δ) 19.15 µs (19.14 to 19.16 µs)	_____
42.	P_2 Pulse Amplitude +5 dB (4.5 to 5.5 dB)	_____
46.	P_3 Pulse Amplitude -19 dB (-19.5 to -18.5 dB)	_____
48.	P_3 Pulse Amplitude -10 dB (-10.3 to -9.7 dB)	_____
50.	P_3 Pulse Amplitude 6 dB (5.5 to 6.5 dB)	_____
52.	P_3 Pulse Amplitude 0 dB (-0.3 to +0.3 dB)	_____
60.	P_6 even Pulse Amplitude	_____ (√)

STEP	DATA	RESULT
61.	SEQ P_6 (UF16) Pulse Width 30.25 µs (30.20 to 30.30 µs)	_____
62.	SEQ P_6 (UF00) Pulse Width 16.25 µs (16.20 to 16.30 µs)	_____
64.	SEQ P_1 to P_6 Pulse Spacing 3.50 µs (3.49 to 3.51 µs)	_____
67.	SEQ P_6 Pulse Width (MIN) 14.75 µs (14.70 to 14.80 µs)	_____
	SEQ P_6 Pulse Width (MAX) 17.75 µs (17.70 to 17.80 µs)	_____
68.	SEQ P_1 to P_2 Pulse Spacing 2.00 µs (1.99 to 2.01 µs)	_____
69.	SEQ P_2 Pulse Width 800 ns (790 to 810 ns)	_____
71.	SEQ P_1 to P_2 Pulse Spacing (+Δ) 3.85 µs (3.84 to 3.86 µs)	_____
72.	SEQ P_1 to P_2 Pulse Spacing (-Δ) 150 ns (140 to 160 ns)	_____
75.	P_2 to SPR Pulse Spacing 2.75 µs (2.70 to 2.80 µs)	_____
76.	SPR and P_6 Transition Times <80 ns	_____(√)
78.	P_2 to SPR Pulse Spacing (MIN) 1.75 µs (1.70 to 1.80 µs)	_____
	P_2 to SPR VAR Pulse Spacing (MAX) 3.75 µs (3.70 to 3.80 µs)	_____
85.	P_5 Leading Edge Position to SPR 400 ns (300 to 500 ns)	_____
89.	SPR to P_5 Trailing Edge Position 400 ns (300 to 500 ns)	_____
90.	P_5 Pulse Width 800 ns (700 to 900 ns)	_____
(3)	Suppressor and Interference Pulses	
10.	Interference to P_1 Pulse Spacing 17.5 µs (17.4491 to 17.5509 µs)	_____
11.	Interference to P_1 Pulse Spacing 399 µs (398.93 to 399.07 µs)	_____

STEP		DATA	RESULT
	12.	Interference Pulse Width (MIN) 200 ns	_____ (√)
		Interference Pulse Width (MAX) 5.0 µs	_____ (√)
	14.	DI First Pulse to P_1 Pulse Spacing 200 µs (199.95 to 200.05 µs)	_____
	15.	First Interrogation Removed	_____ (√)
	18.	ATC Suppression Pulse to P_3 Pulse Spacing 800 ns (700 to 900 ns)	_____
	19.	SEQ Suppression Pulse to SPR Pulse Spacing 800 ns (700 to 900 ns)	_____
	20.	ACL Suppression Pulse to P_3 Pulse Spacing 800 ns (700 to 900 ns)	_____
	21.	ACS Suppression Pulse to P_3 Pulse Spacing 800 ns (700 to 900 ns)	_____
(4)	RF Level		
	5.	ATC-1400A (Antenna A) Power Meter reference reading (RF output to ATC-1400A disconnected)	_____
	6.	Antenna A Power Meter reading does not change (RF output to ATC-1400A connected) <0.05 dB difference	_____ (√)
	7.	Antenna A RF Level Change (MAX) +3.0 dB (+2.7 to +3.3 dB)	_____
	8.	Antenna A RF Level Change (MIN) -3.0 dB (-3.3 to -2.7 dB)	_____
	9.	Antenna A Level Change 0 dB (-0.05 to +0.05 dB)	_____
	15.	Antenna A Signal Level reference	_____
	17.	Antenna B Signal Level Step 15 reference (±1 dB)	_____
	22.	Antenna B (with MLD option) Power Meter reference reading -20 dBm (-21 to -19 dBm)	_____
	23.	Antenna B (with MLD option) RF Level Change (MAX) +3.0 dB (+2.7 to +3.3 dB)	_____
	24.	Antenna B (with MLD option) RF Level Change (MIN) -3.0 dB (-3.3 to -2.7 dB)	_____

STEP		DATA	RESULT
(5)	Antenna B		
	12.	Sync to P_1 Pulse Spacing reference (Antenna A, ATC-1400A)	_____
	14.	P_1 (Antenna B, S-1403C) conincident with P_1 (Antenna A) 0 ns (-25 to +25 ns)	_____
	15.	P_1 (Antenna B) Pulse Width 800 ns (790 to 810 ns)	_____
	16.	P_2 to SPR (Antenna B) Spacing 2.75 µs (2.70 to 2.80 µs)	_____
	17.	SPR to second Phase Transition (Antenna B) 1.0 µs (990 to 1010 ns)	_____
	19.	P_1 (Antenna B) positive position shift 950 ns (900 to 1000 ns)	_____
	20.	P_1 (Antenna B) negative position shift -950 ns (-1000 to -900 ns)	_____
	23.	Antenna B Frequency 1030.00 MHz (1029.99 to 1030.01 MHz)	_____
	24.	TCXO input Voltage 6.0 Vdc (5.5 to 6.5 Vdc)	_____
	25.	TCXO course adjust 1030 MHz (1029.9996 to 1030.0004)	_____
	26.	R16003 (TCXO) fine adjust 1030 MHz (1029.999950 to 1030.000050 MHz)	_____
(6)	Reply Delay and PPMG		
	11.	Power Display reference reading	_____
	12.	P_3 to F_1 Pulse Spacing (Reply Delay)	_____
	13.	Antenna A Reply Delay Reading (Reply Delay ±100 ns)	_____
	14.	Power Display reading not changed	_____(√)
	16.	PPG, Power Display reading changed <10%	_____(√)
	18.	PPG, SPI, Power Display reads 0	_____(√)
	22.	Antenna B Reply Delay Reading (Reply Delay ±100 ns)	_____

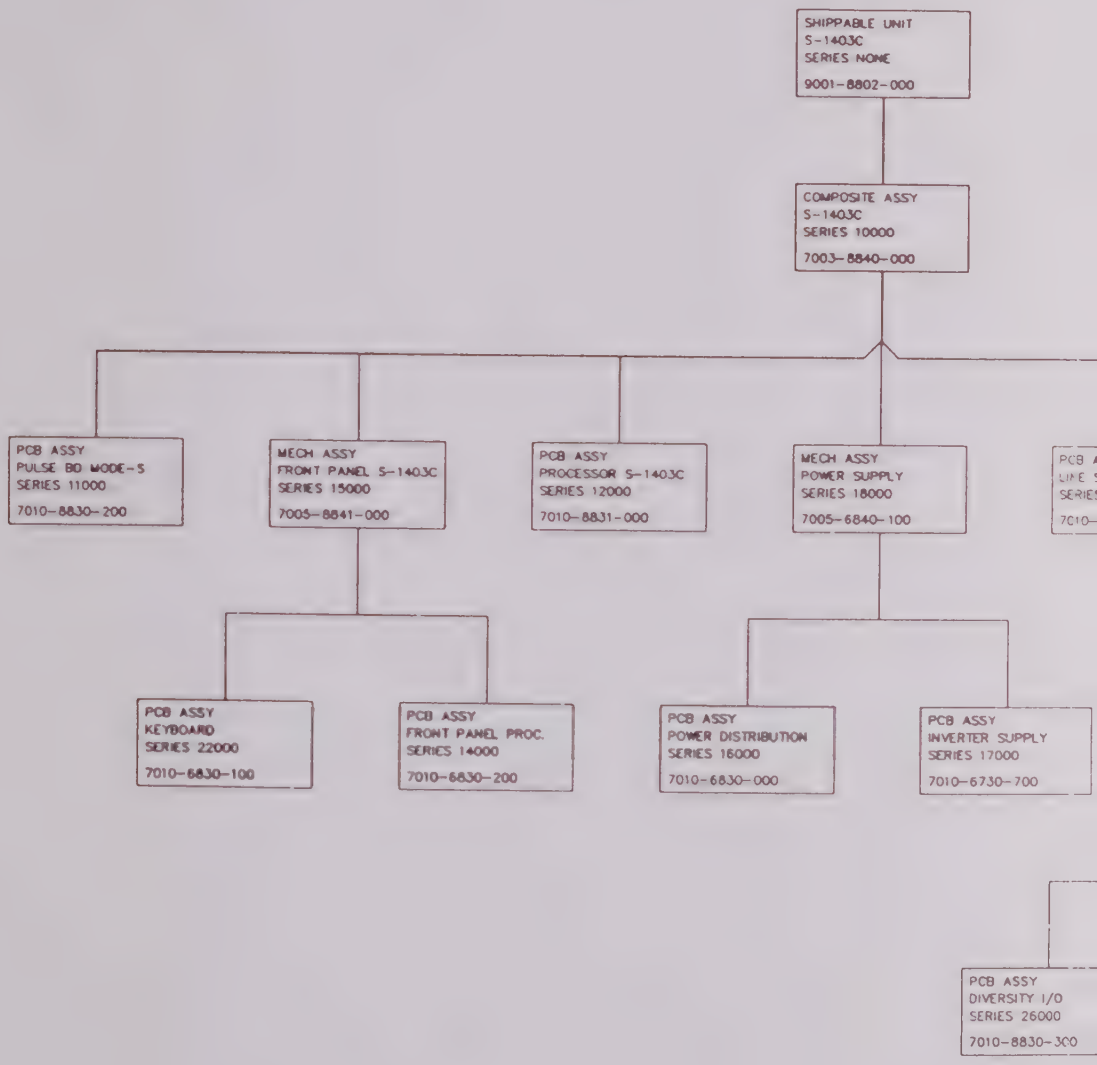
SHIPPABLE UNIT
S-1403C
SERIES NONE
9001-8802-000
COMPOSITE ASSY
S-1403C
SERIES 10000
7003-8840-000
PCB ASSY
PULSE BD MODE-S
SERIES 11000
7010-8830-200
MECH ASSY
FRONT PANEL S-1403C
SERIES 15000
7005-8841-000
PCB ASSY
PROCESSOR S-1403C
SERIES 12000
7010-8831-000
MECH ASSY
POWER SUPPLY
SERIES 18000
7005-6840-100
PCB ASSY
KEYBOARD
SERIES 22000
7010-6830-100
PCB ASSY
FRONT PANEL PROC.
SERIES 14000
7010-6830-200
PCB ASSY
POWER DISTRIBUTION
SERIES 16000
7010-6830-000
PCB ASSY
INVERTER SUPPLY
SERIES 17000
7010-6730-700
PCB ASSY
DIVERSITY I/O
SERIES 26000
7010-8830-3C0

DATE	REV	CHANGE	APVD
6-24-91	A	DESIGN RELEASE RGC	SL

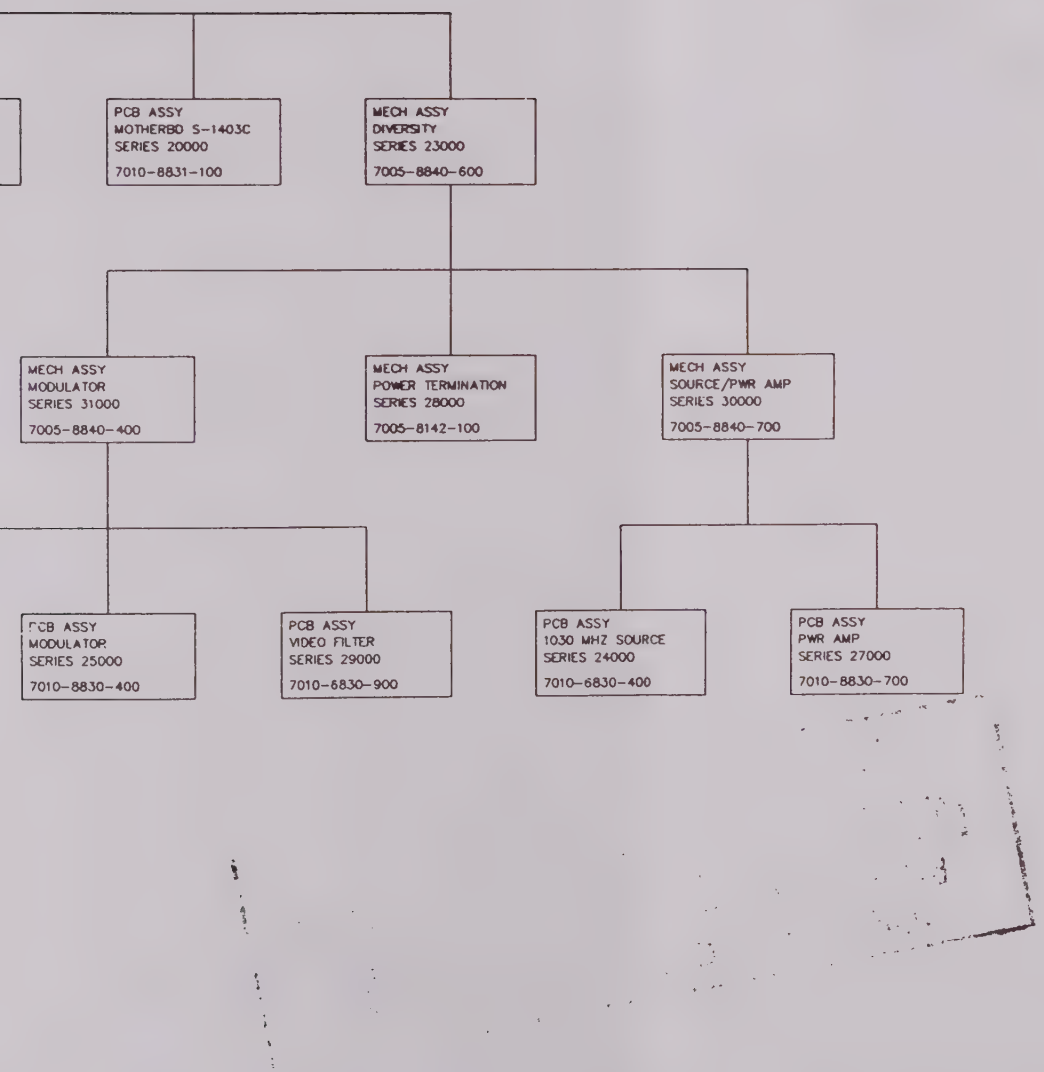

		IFR SYSTEMS INC. 10300 West York St., Wichita, Kansas 67215
DRAWN D.HAYNES	DATE 4/10/90	TITLE PRODUCT STRUCTURE S-1403C
CHECKED R.CRAWFORD	DATE 6-24-91	
APPROVED P.R.HARRIS	DATE 6-24-91	SIZE D / DWG. NO. 0000-8800-100 / REV A
		SCALE / DO NOT SCALE / FSCM 51190 / SHEET 1 OF 1

ASSY NO.	REVISION	DESCRIPTION	LAST ECN	DATE INC
9001-8802-000	A	SHIP UNIT,S-1403C		10/30/71

STAT	REF.DES.	QTY	COMP. PART NO.	DESCRIPTION	EFFECTIVE
ACT		1.00	1000-1000-900	CARTON,SHIPPING,NAV-750B	00/00/00
ACT		1.00	1002-8801-200	MANUAL, OP, S-1403C MODE S	00/00/00
ACT		1.00	1003-0001-000	BINDER,MANUAL,1.0 WIDE	00/00/00
ACT		1.00	1007-0001-000	WARRANTY PACKET,2 YEAR	00/00/00
ACT		1.00	1008-0001-000	WARRANTY REGISTRATION CARD	00/00/00
ACT		1.00	1100-1002-900	ENVELOPE, BUSINESS REPLY	00/00/00
ACT		1.00	2400-6753-000	LABEL,SERIAL NO.-OP. VOLTAGE	00/00/00
ACT		1.00	2400-8501-000	LABEL,RECEIVING/UNPACKING	00/00/00
ACT		1.00	6040-7580-400	CABLE ASSY,ATC-1400A IFR BUS	00/00/00
ACT		1.00	6040-7580-500	CABLE ASSY,ATC-1400A AUX BUS	00/00/00
ACT		1.00	6041-0001-000	CABLE ASSY,IEC STR,COR 80-1245	00/00/00
ACT		3.00	6050-0042-020	COAX ASSY,316,R F SMB/R F SMB	00/00/00
ACT		1.00	7003-8840-000	COMPOSITE ASSY, S-1403C	00/00/00
ACT		1.00	7005-6743-000	CASE MTG KIT 3.5"TO 7"	00/00/00
ACT		1.00	8180-0002-010	URETHANE CTLST	00/00/00
ACT		1.00	8180-0002-020	URETHANE RESIN	00/00/00
ACT		72.00	8181-0001-000	POLY FILM,36" CENTERFOLD WHITE	00/00/00

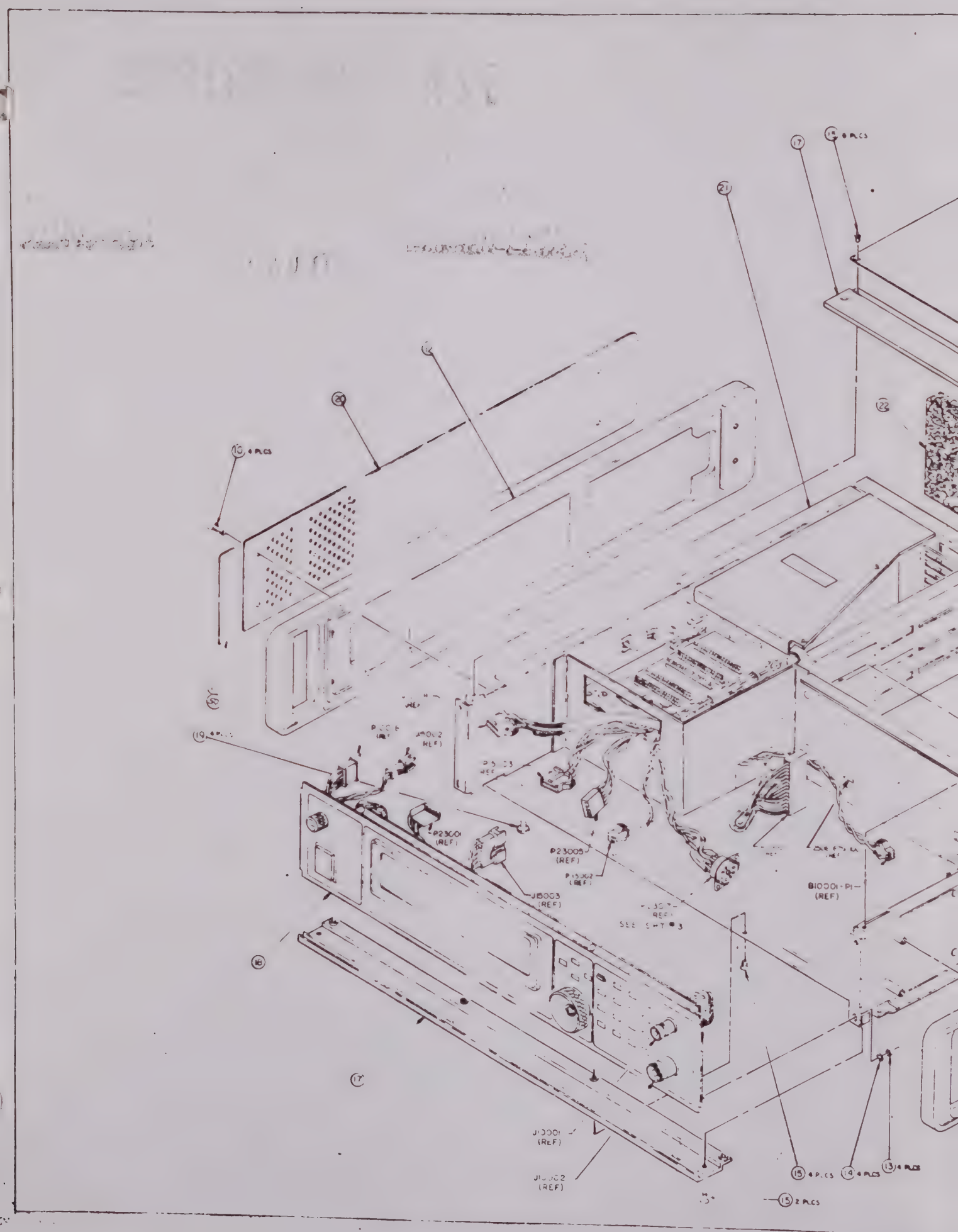

P23001 (REF)
P23005 (REF)
J15003 (REF)
B10001-P1 (REF)
J10001 (REF)
J10002 (REF)
SEE SHT #3

DATE	REV	CHANGE	APPD
5.3.91	A	DESIGN RELEASE	SL

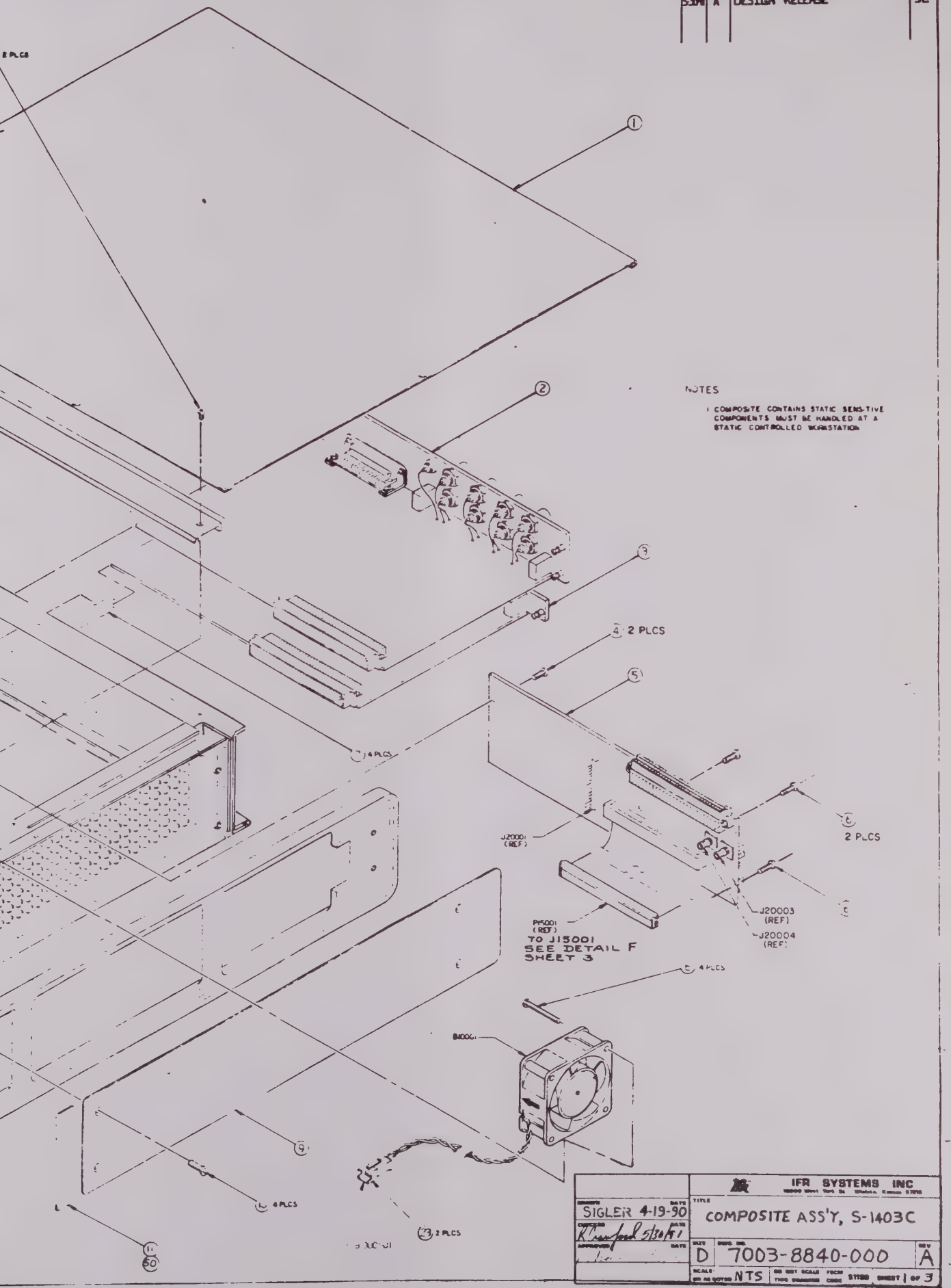

NOTES

1 COMPOSITE CONTAINS STATIC SENSITIVE COMPONENTS MUST BE HANDLED AT A STATIC CONTROLLED WORKSTATION

DRAWN SIGLER 4-19-90	IFR SYSTEMS INC	
CHECKED K Crawford 5/30/91	TITLE COMPOSITE ASS'Y, S-1403C	
APPROVED	SIZE D	DWG. NO. 7003-8840-000 REV A
	SCALE NTS	SHEET 1 OF 3

CABLE	[illegible]
FROM	
J10019	[illegible]
J10018	[illegible]
P19001	[illegible]
P20001	[illegible]
P15002	[illegible]
[illegible]	[illegible]
[illegible]	[illegible]

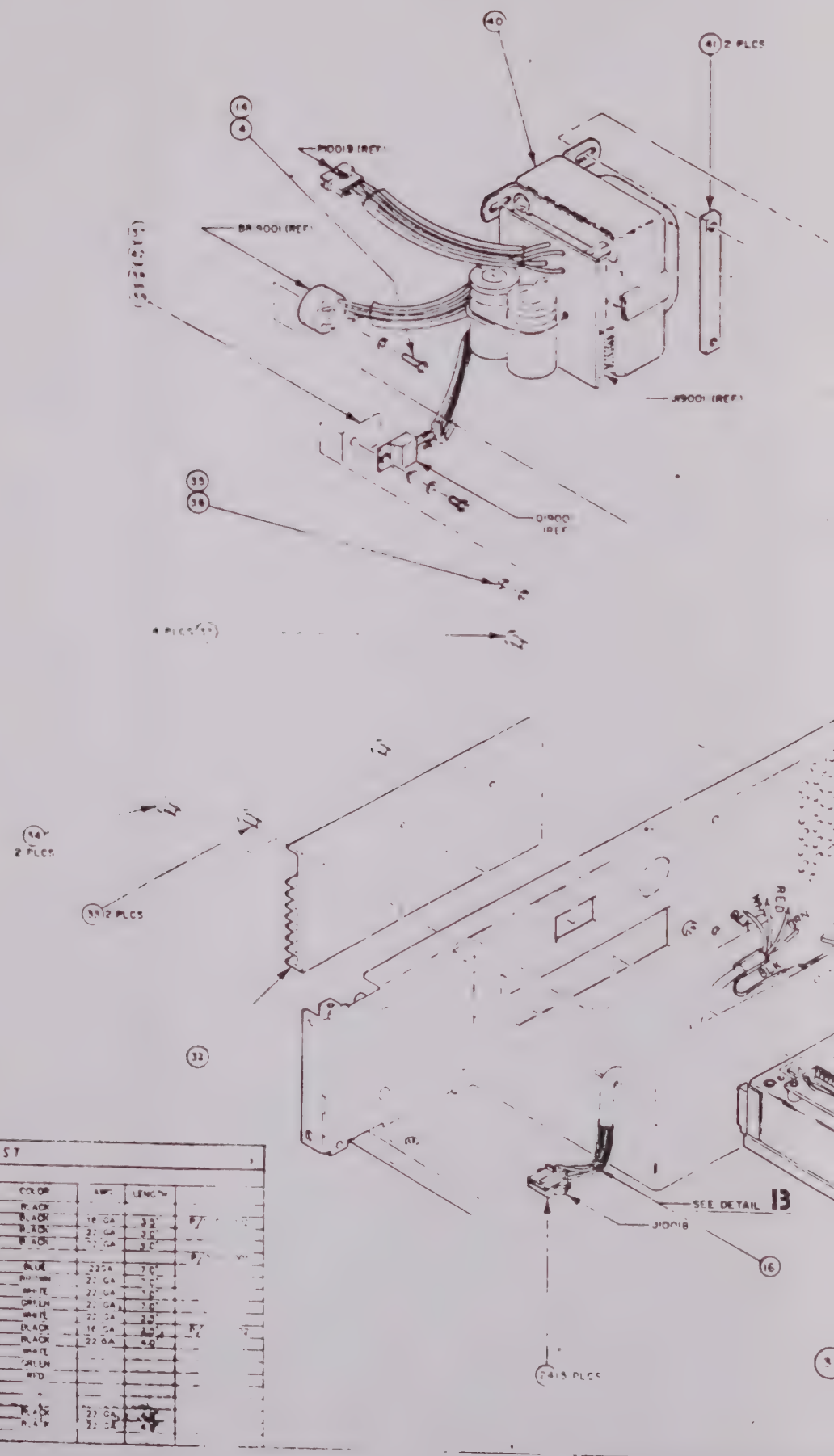

WIRE RUNNING LIST

LINE NO.	FROM TERMINAL	FROM NOTES	TO TERMINAL	NOTES	COLOR	AWG	LENGTH	
1	[illegible]	SQ1	J10018		BLACK			
2	[illegible]		S10002-2	HEAT SHRINK	BLACK	16 GA	3.5"	P/
3	[illegible]		[illegible]		BLACK	22 GA	3.0"	
4	[illegible]		S10001-3		BLACK	22 GA	3.0"	
5	[illegible]		S10001-4	BUS WIRE				P/
6	[illegible]		J10019-3		BLUE	22 GA	7.0"	
7	[illegible]		[illegible]		BROWN	22 GA	7.0"	
8	[illegible]		J10019-4		WHITE	22 GA	7.0"	
9	[illegible]		[illegible]		GREEN	22 GA	7.0"	
10	[illegible]		[illegible]		WHITE	22 GA	2.5"	
11	J10017-1		[illegible]	HEAT SHRINK	BLACK	16 GA	2.5"	P/
12	J10017-2	SQ1	J10018-3	SHIELD WIRE	BLACK	22 GA	4.0"	
13	J10017-3	SQ1	J10018-2		WHITE			
14	[illegible]	SQ1	J10018-4		GREEN			
15	J10018-3	SQ1	J10018-5		RED			
16	[illegible]	P/O FAN	BLACK WIRE	BJ10001-1				
17	[illegible]	P/O FAN	RED WIRE	BJ10001-2				
18	[illegible]		J10018-2		BLACK	22 GA	[illegible]	
19	J10018	SHIELD WIRE	J10018-1		BLACK	22 GA	[illegible]	
20	[illegible]	N/C						

DATE	REV	CHANGE
		SEE SHEET ONE

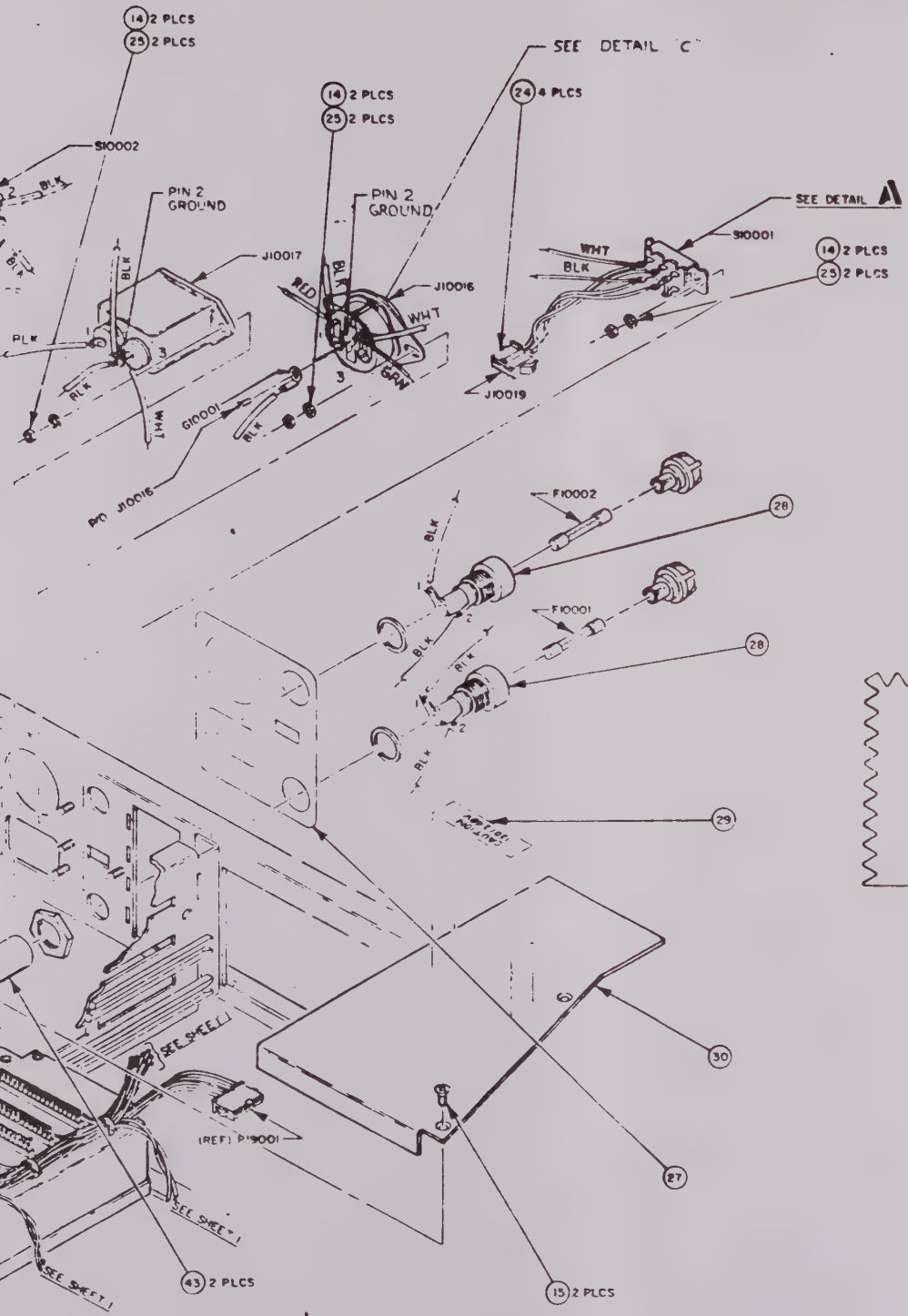

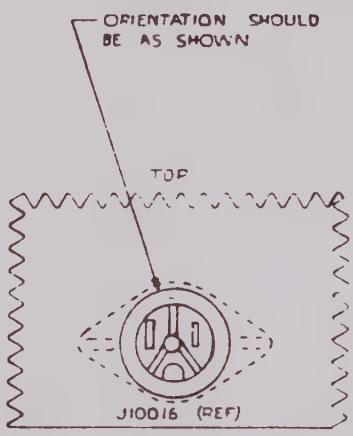

DETAIL C
SHOWN ASSEMBLED

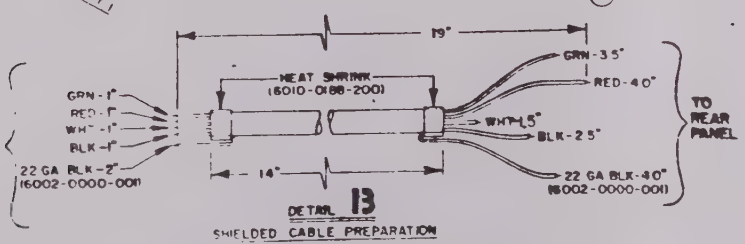

DETAIL 13
SHIELDED CABLE PREPARATION

DRAWN SIGLER	DATE 4-19-90	IFR SYSTEMS INC	
CHECKED Klumford	DATE 5/30/91	TITLE COMPOSITE ASSY S-1403C	
APPROVED	DATE	SIZE D	DWG. NO. 7003-8840-000 REV A
		SCALE NTS	DO NOT SCALE PRINT SHEET 2 OF 3

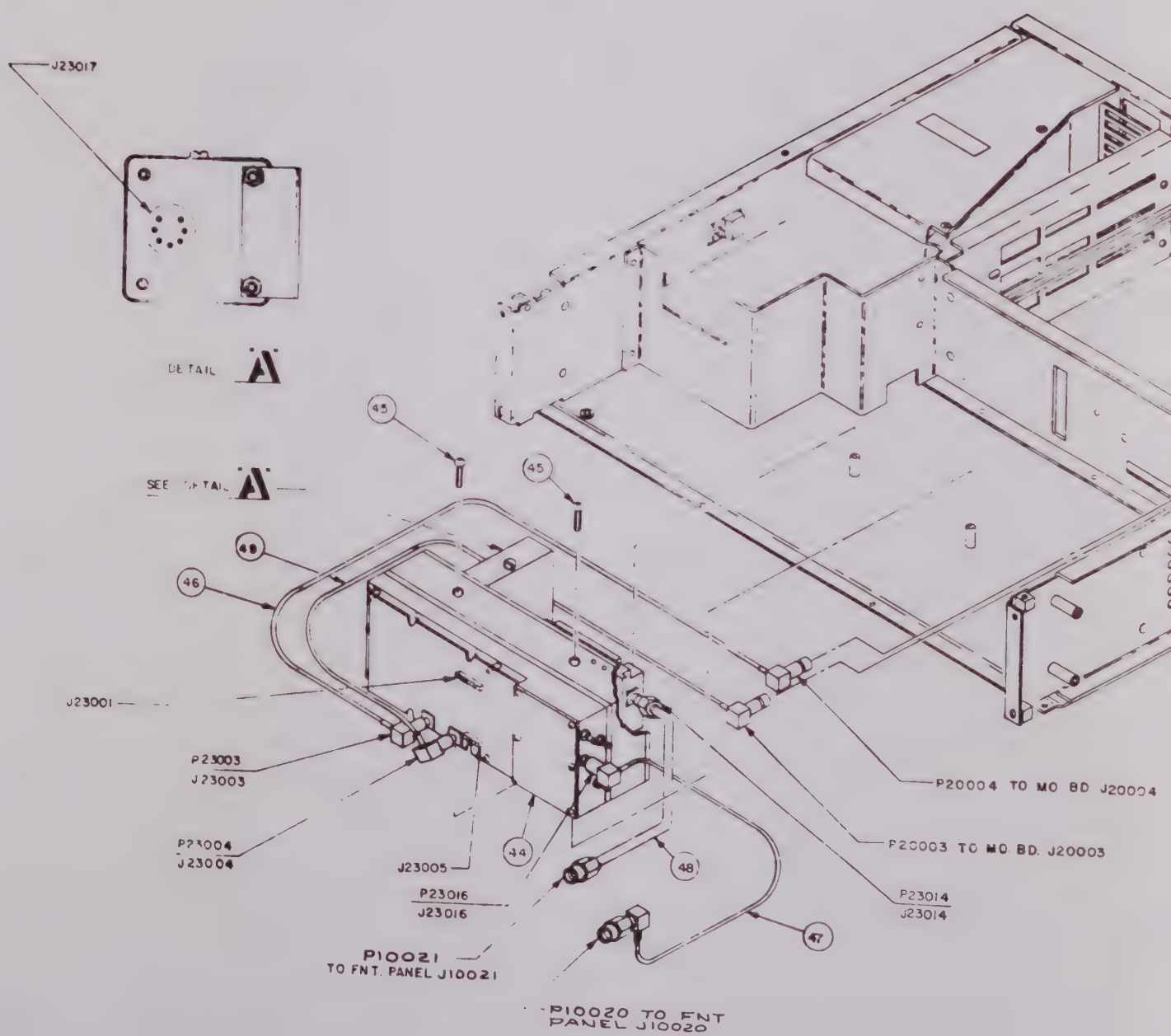
J23017
DETAIL A
SEE DETAIL A
45
45
48
46
J23001
P23003
J23003
P23004
J23004
J23005
44
48
P23016
J23016
47
P10021
TO FNT. PANEL J10021
P10020 TO FNT
PANEL J10020
P20004 TO MO BD J20004
P20003 TO MO BD. J20003
P23014
J23014
SEE DETAIL "F"

DATE	REV	CHANGE	APVD
		SEE SHEET ONE	

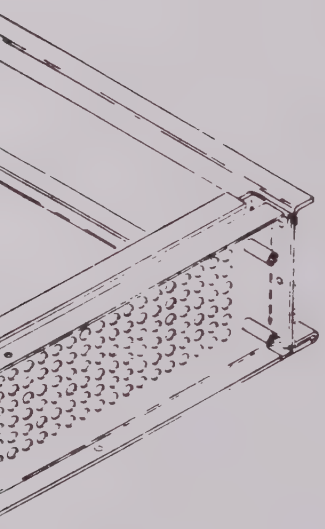

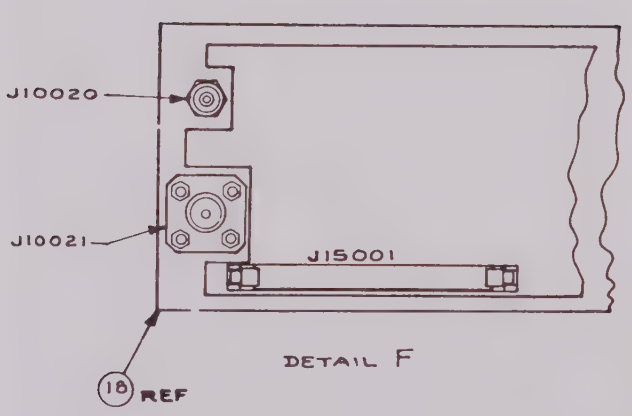

DETAIL F

DRAWN SIGLER 4-19-90 DATE	IFR SYSTEMS INC	
CHK'D DATE	TITLE COMPOSITE ASSY S-1403C	
	SIZE D	DWG NO 7003-8840-000 REV A
	SCALE NONE	DO NOT SCALE THIS DRAWING SHEET 3 OF 3

ASSY NO.	REVISION	DESCRIPTION	LAST ECN	DATE INC
7003-8840-000	A	COMPOSITE ASSY, S-1403C		10/30/71

STAT	REF.DES.	QTY	COMP. PART NO.	DESCRIPTION	EFFE
ACT		1.00	6002-0000-001	WIRE,HOOK,TFE,22GA, 7S,BLACK	87/05.
ACT		.60	6002-0000-002	WIRE,HOOK,TFE,22GA, 7S,BROWN	87/05/0.
ACT		.30	6002-0000-003	WIRE,HOOK,TFE,22GA, 7S,RED	87/06/16
ACT		.90	6002-0000-006	WIRE,HOOK,TFE,22GA, 7S,GREEN	87/05/05
ACT		.60	6002-0000-007	WIRE,HOOK,TFE,22GA, 7S,BLUE	87/05/05
ACT		.90	6002-0000-010	WIRE,HOOK,TFE,22GA, 7S,WHITE	87/05/05
ACT	*01	1.00	1414-6750-200	COVER,TOP	87/05/05
ACT	*02	1.00	7010-8830-200	PCB ASSY,PULSE MODE S	00/00/00
ACT	*03	1.00	7010-8831-000	PCB ASSY, PROCESSOR	00/00/00
ACT	*04	3.00	2803-0438-006	SCREW,4-40 X 7/16 PPHM	87/05/05
ACT	*05	1.00	7010-8831-100	PCB ASSY, MOTHERBOARD	00/00/00
ACT	*06	3.00	2803-0500-006	SCREW,4-40 X 1/2 PPHM	87/06/16
ACT	*07	4.00	4104-0000-001	CARD GUIDE NATURAL 23071-5	87/05/05
ACT	*08	4.00	2803-1188-006	SCREW,4-40 X 1 3/16 PPHMS	87/05/05
ACT	*09	1.00	1414-6752-000	COVER,RIGHT SIDE	00/00/00
ACT	*10	8.00	2804-0500-003	SCREW,6-32 X 1/2 PFHM	87/05/05
ACT	*11	2.00	1414-6752-100	COVER,RACK MTG	87/05/14
ACT	*12	2.00	1402-6750-900	RAIL,SIDE	87/05/05
ACT	*13	4.00	2850-0000-008	NUT,HEX,REG PAT,4-40	87/05/05
ACT	*14	11.00	2840-0000-003	WASHER,LOCK,INT TOOTH,4	87/05/05
ACT	*15	16.00	2803-0250-003	SCREW,4-40 X 1/4 PFHM	87/05/05
ACT	*16	1.60	6040-7730-504	CABLE,SQ1,4C,24GA	87/05/05
ACT	*17	2.00	2410-6751-300	BAR,TRIM FRONT PANEL	87/05/05
ACT	*18	1.00	7005-8841-000	MECH ASSY,FRONT PANEL	00/00/00
ACT	*19	4.00	1421-0002-438	FOOT,RBR HEMI,W/6-32 X 1/4 STD	87/05/05
ACT	*20	1.00	1414-6751-900	COVER,LEFT SIDE	00/00/00

ASSY NO.	REVISION	DESCRIPTION	LAST ECN	DATE INC
7003-8840-000	A	COMPOSITE ASSY, S-1403C		10/30/71

STAT	REF.DES.	QTY	COMP. PART NO.	DESCRIPTION	EFFECTIVE
ACT	*21	1.00	6500-6880-600	MINOR ASSY,CHASSIS	00/0
ACT	*22	1.00	2601-6751-800	FILTER,FAN	00/0
ACT	*23	2.00	2114-9001-001	CONTACT PIN26-22GA.SYM001T0.6*	87/0
ACT	*24	9.00	2114-9002-001	CONTACT SKT26-22GA.SHF001T855*	87/
ACT	*25	6.00	2850-0000-020	NUT,HEX,SMALL PAT,4-40	87/
ACT	*26	.15	6010-0188-200	TUBING,HS, 3/16 ID,BLACK	87/
ACT	*27	1.00	2403-6751-400	OVERLAY,REAR PANEL	00/0
ACT	*28	2.00	5105-0501-000	HOLDER,FUSE,BUSSMAN HTA	00/00
ACT	*29	1.00	2400-8002-000	LABEL,CAUTION,120/240V	00/00/00
ACT	*30	1.00	1414-6751-700	COVER,HIGH VOLTAGE	00/00/00
ACT	*31	1.00	7005-6840-100	MECH ASSY, POWER SUPPLY	00/00/00
ACT	*32	1.00	5400-6751-500	HEATSINK,POWER SUPPLY	00/00/0
ACT	*33	6.00	2804-0313-006	SCREW 6-32X5/16 PHIL BIND HD	87/05/05
ACT	*34	2.00	2804-0250-006	SCREW,6-32 X 1/4 PPHM	87/05/05
ACT	*35	1.00	2840-0000-001	WASHER,LOCK,INT TOOTH,6	87/05/14
ACT	*36	1.00	2850-0000-002	NUT,HEX,SMALL PAT,6-32	87/05/14
ACT	*37	1.00	2803-0250-006	SCREW,4-40 X 1/4 PPHM	87/05/05
ACT	*38	1.00	2840-6153-500	WASHER PPS SHOULDER *	87/06/16
ACT	*39	1.00	4835-0000-103	INSUL,MICA,TO-220 TRANS,DF103B	87/06/16
ACT	*40	1.00	7010-6730-800	PCB ASSY,LINE SUPPLY	00/00/00
ACT	*41	2.00	1400-5157-000	BRACKET,XFMR MTG BAR,	00/00/00
ACT	*42	1.00	2840-0000-009	WASHER,FLAT,4,MS15795-803	87/05/05
ACT	*43	2.00	6007-0000-001	CAP,S ID.375-RED 1 INCH	00/00/00
ACT	*44	1.00	7005-8840-600	MECH ASSY, DIVERSITY	00/00/00
ACT	*45	2.00	2804-1375-006	SCREW,6-32 X 1 3/8 PPHMS	00/00/00
ACT	*46	1.00	6050-0361-550	COAX ASSY,FLEXIBLE,RG 316/U	00/00/00

ASSY NO.	REVISION	DESCRIPTION	LAST ECN	DATE INC
7003-8840-000	A	COMPOSITE ASSY, S-1403C		10/30/71

STAT	REF.DES.	QTY	COMP. PART NO.	DESCRIPTION	EFFECTIVE
ACT	*47	1.00	6050-0560-550	COAX ASSY, 316. RM SMA/RF SMB	00/00/00
ACT	*49	1.00	6050-0361-700	COAX ASSY,FLEXIBLE,RG 316/U	00/00/00
ACT	*50	.00	1050-0000-170	TAPE,DBL BKD VINYL FOAM,3/4"	00/00/00
ACT	B10001	1.00	2600-0007-000	FAN, 12VDC,2.362SQ,17.7CFM	00/00/00
ACT	B10001-J1	1.00	2115-9001-002	CONN,RECT.098 RCPT 2-P *	00/00/00
ACT	F10001	1.00	5106-0300-600	FUSE,1.25,GL,FAST,250V,3.0A	00/00/00
ACT	F10002	1.00	5106-0000-026	FUSE,1.25,GL,MED, 250V,0.50A	00/00/00
ACT	G10001	1.00	2850-0000-015	LUG,GND,4	00/0 /0[illegible]
ACT	J10016	1.00	2220-1001-000	CONN,POWER,AC PRIMARY,125V,15A	00/0[illegible]
ACT	J10017	1.00	2220-1021-100	CONN, PWR, FLTR AC, MALE RCPT*	00/0[illegible]
ACT	J10018	2.00	2115-9002-005	CONN,RECT.098 PLUG 5-P,SMP05VB	00/[illegible]
ACT	J10019	-.--	2115-9002-005	CONN,RECT.098 PLUG 5-P,SMP05VB	00/[illegible]
ACT	S10001	1.00	5135-2025-500	SWITCH,SLIDE,DPDT,115V/230V	00/[illegible]
ACT	S10002	1.00	4800-0000-012	THERMOSTAT,SPST,5A,160-170+-5	87/05/[illegible]

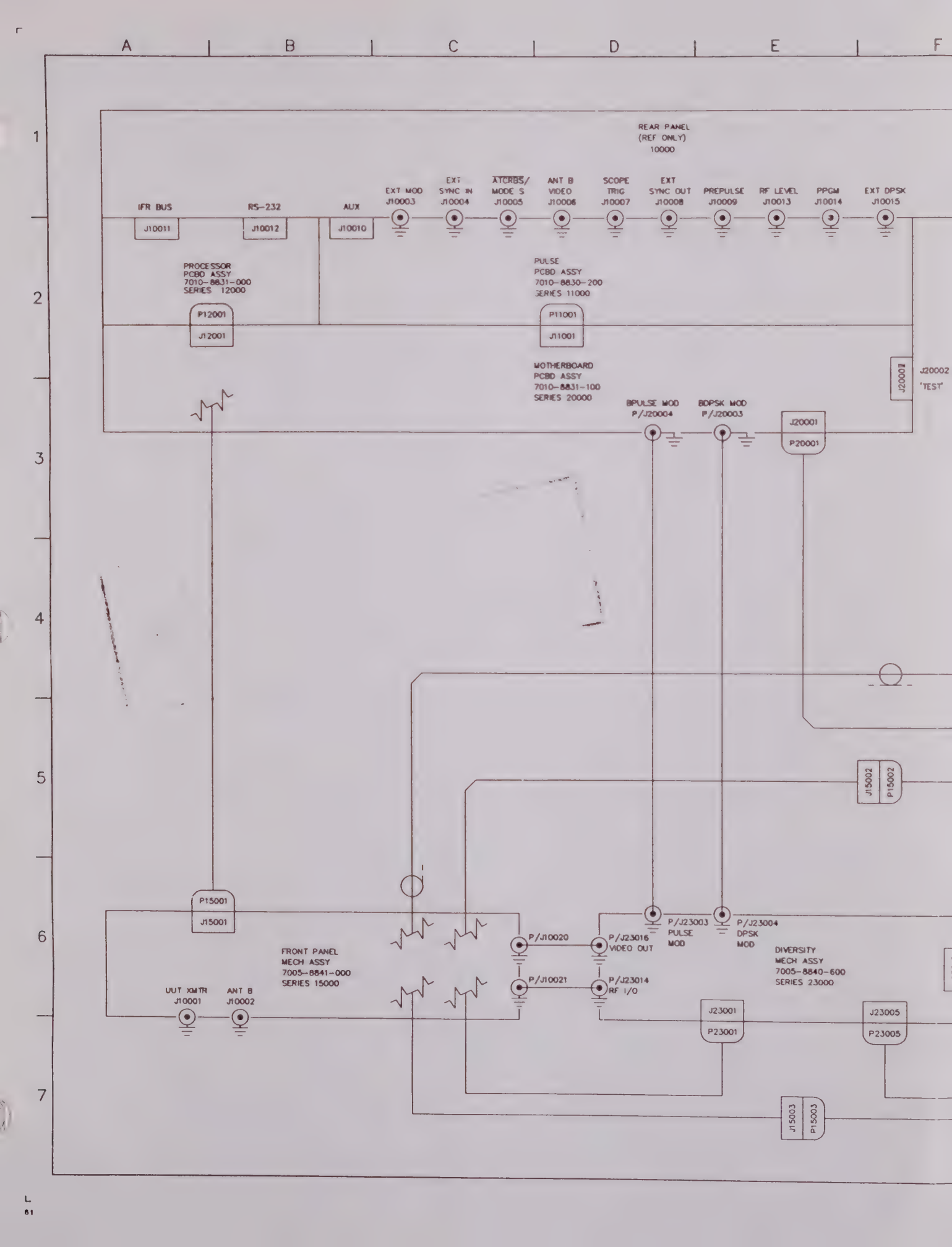
A
B
C
D
E
F
1
2
3
4
5
6
7
REAR PANEL
(REF ONLY)
10000
IFR BUS
J10011
RS-232
J10012
AUX
J10010
EXT MOD
J10003
EXT
SYNC IN
J10004
ATCRBS/
MODE S
J10005
ANT B
VIDEO
J10006
SCOPE
TRIG
J10007
EXT
SYNC OUT
J10008
PREPULSE
J10009
RF LEVEL
J10013
PPGM
J10014
EXT DPSK
J10015
PROCESSOR
PCBD ASSY
7010-8831-000
SERIES 12000
P12001
J12001
PULSE
PCBD ASSY
7010-8830-200
SERIES 11000
P11001
J11001
MOTHERBOARD
PCBD ASSY
7010-8831-100
SERIES 20000
J20002
'TEST'
BPULSE MOD
P/J20004
BDPSK MOD
P/J20003
J20001
P20001
J15002
P15002
P15001
J15001
FRONT PANEL
MECH ASSY
7005-8841-000
SERIES 15000
UUT XMTR
J10001
ANT B
J10002
P/J10020
P/J10021
P/J23016
VIDEO OUT
P/J23014
RF I/O
P/J23003
PULSE
MOD
P/J23004
DPSK
MOD
DIVERSITY
MECH ASSY
7005-8840-600
SERIES 23000
J23001
P23001
J23005
P23005
J15003
P15003

G H J K L

DATE	REV	CHANGE	APVD
6-24-91	A	DESIGN RELEASE RGC	SL

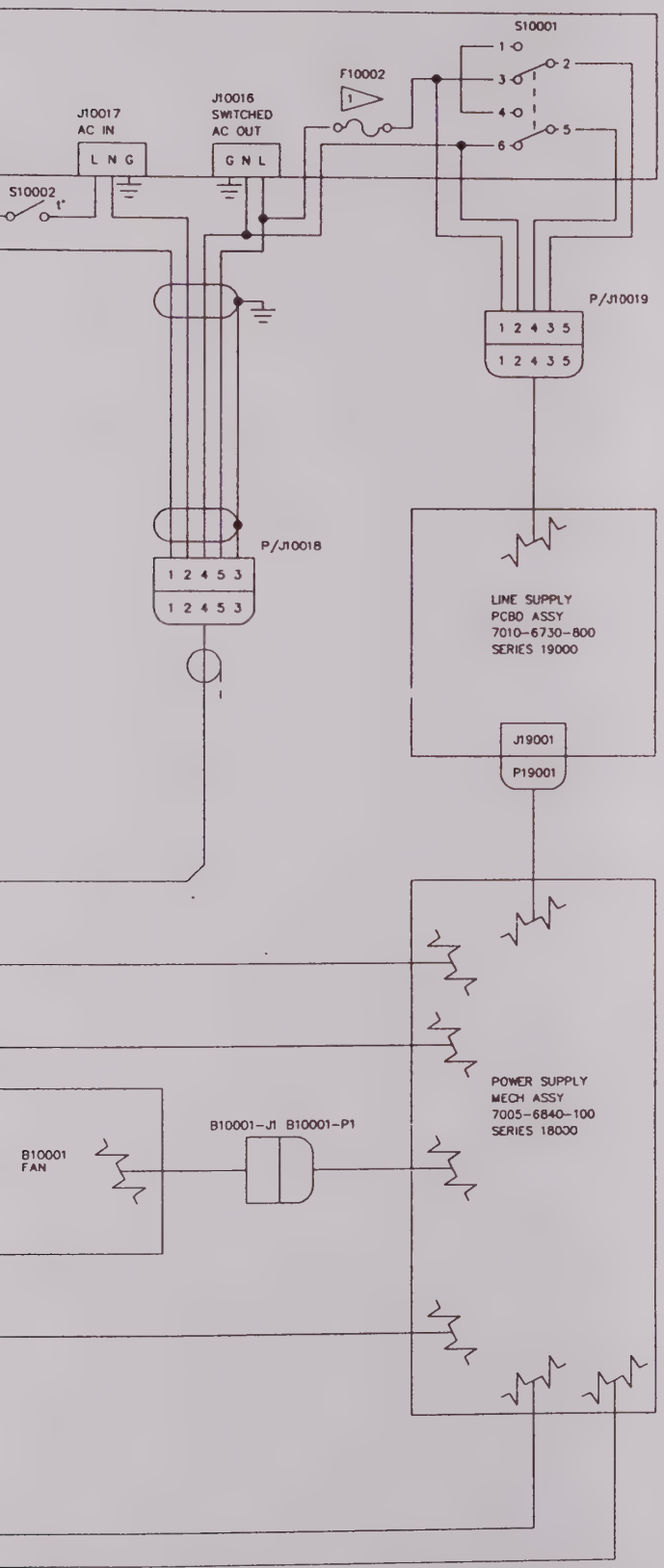

NOTES:
(UNLESS OTHERWISE NOTED)

1. WHEN SWITCH S10001 IS IN THE 115 VOLT POSITION
   FUSE F10001 SHOULD BE A 3.0 AMP FAST-BLOW FUSE.
   FUSE F10002 SHOULD BE A 0.5 AMP MED-BLOW FUSE.

   WHEN SWITCH S10001 IS IN THE 230 VOLT POSITION
   FUSE F10001 SHOULD BE A 3.0 AMP FAST-BLOW FUSE.
   FUSE F10002 SHOULD BE A 0.25 AMP MED-BLOW FUSE.

IFR SYSTEMS INC
10200 West York St., Wichita, Kansas 67215

DRAWN D.HAYNES	DATE 2-25-88	TITLE: CIRCUIT SCHEMATIC S-1403C INTERCONNECT
CHECKED R.CRAWFORD	DATE 6-24-91	
APPROVED P.R.HARRIS	DATE 6-24-91	
SIZE D	DWG. NO. 0000-8840-000	REV A
SCALE	DO NOT SCALE	FSCM 51190 SHEET 1 OF 1

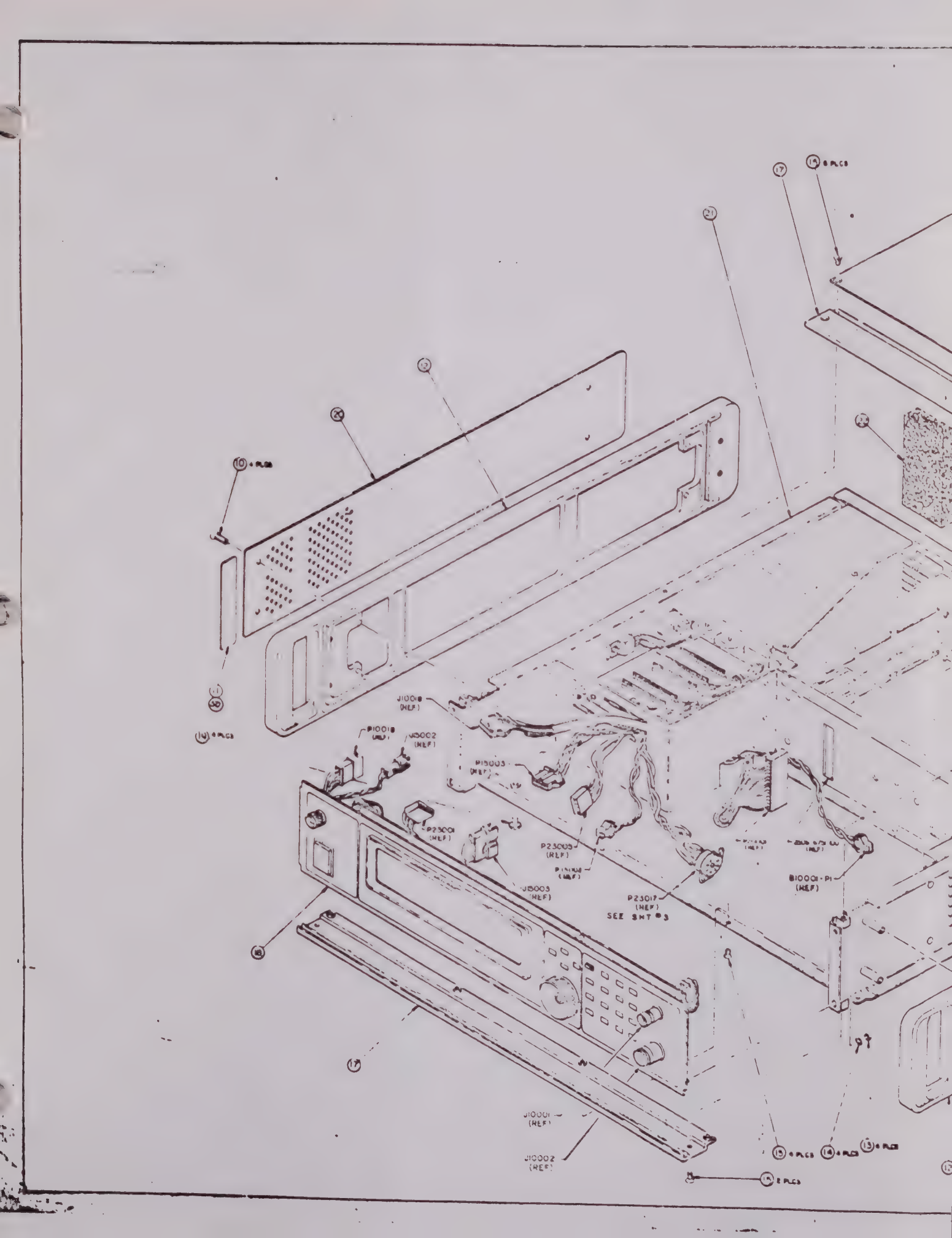
J10018 (REF)
P10018 (REF)
J15002 (REF)
P15003 (REF)
P23001 (REF)
P23009 (REF)
J15003 (REF)
P23017 (REF) SEE SHT #3
B10001-P1 (REF)
J10001 (REF)
J10002 (REF)

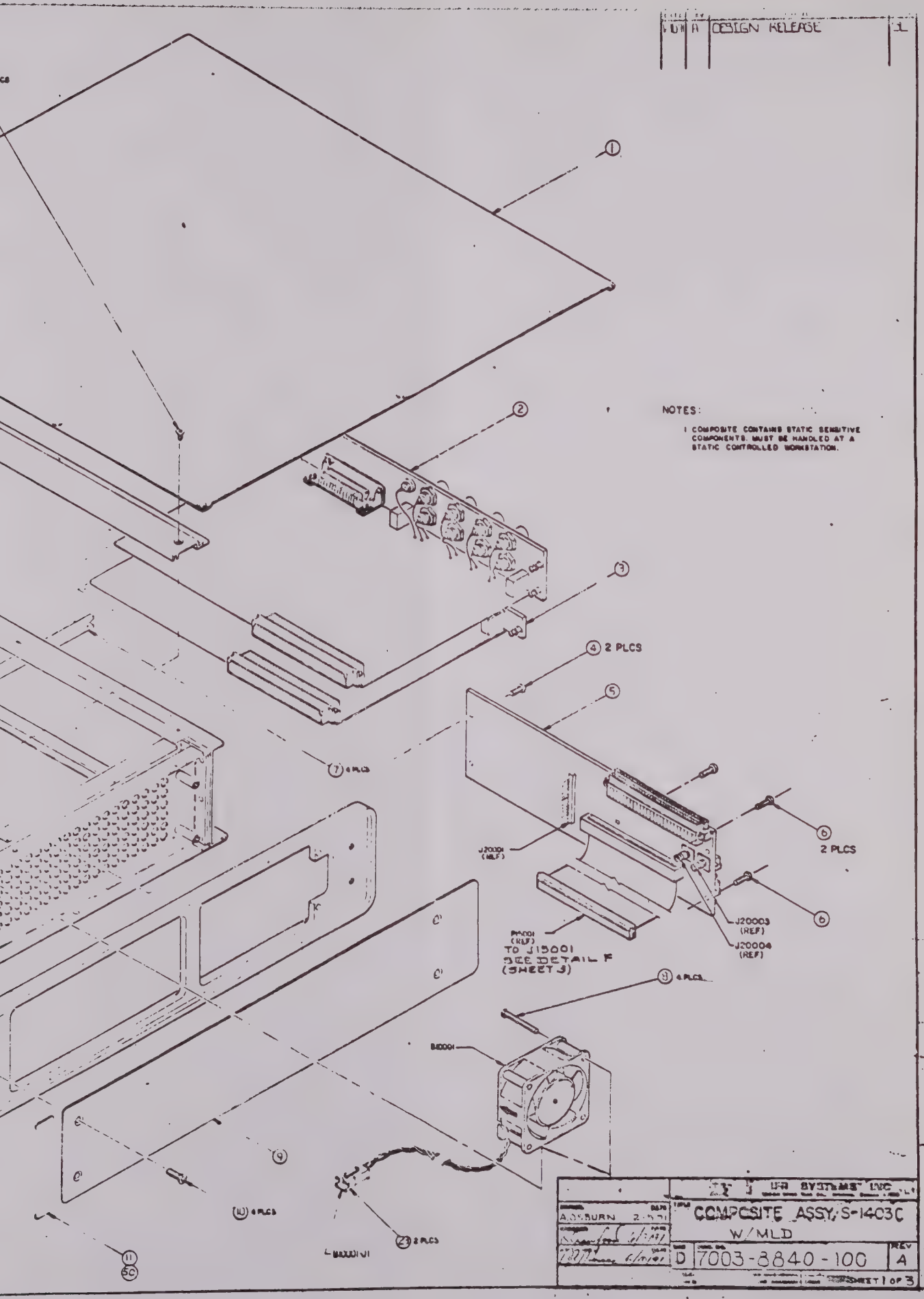

A DESIGN RELEASE
NOTES:
1 COMPOSITE CONTAINS STATIC SENSITIVE COMPONENTS. MUST BE HANDLED AT A STATIC CONTROLLED WORKSTATION.
1
2
3
4 2 PLCS
5
6 2 PLCS
6
7 4 PLCS
8 4 PLCS
9
10 4 PLCS
11 SC
23 2 PLCS
J20001 (REF)
P15001 (REF)
TO J15001 SEE DETAIL F (SHEET 3)
J20003 (REF)
J20004 (REF)
B10001
UFR SYSTEMS INC
A. OSBURN
COMPOSITE ASSY, S-1403C
W/MLD
D
7003-8840-100
REV A
SHEET 1 OF 3

CABLE CONNECTIONS	
FROM	TO
J10018	P10018
J10018	P10018
P19001	J19001
P20001	J20001
P15002	J15002
B10001-P1	B10001-J1
P15001	J15001

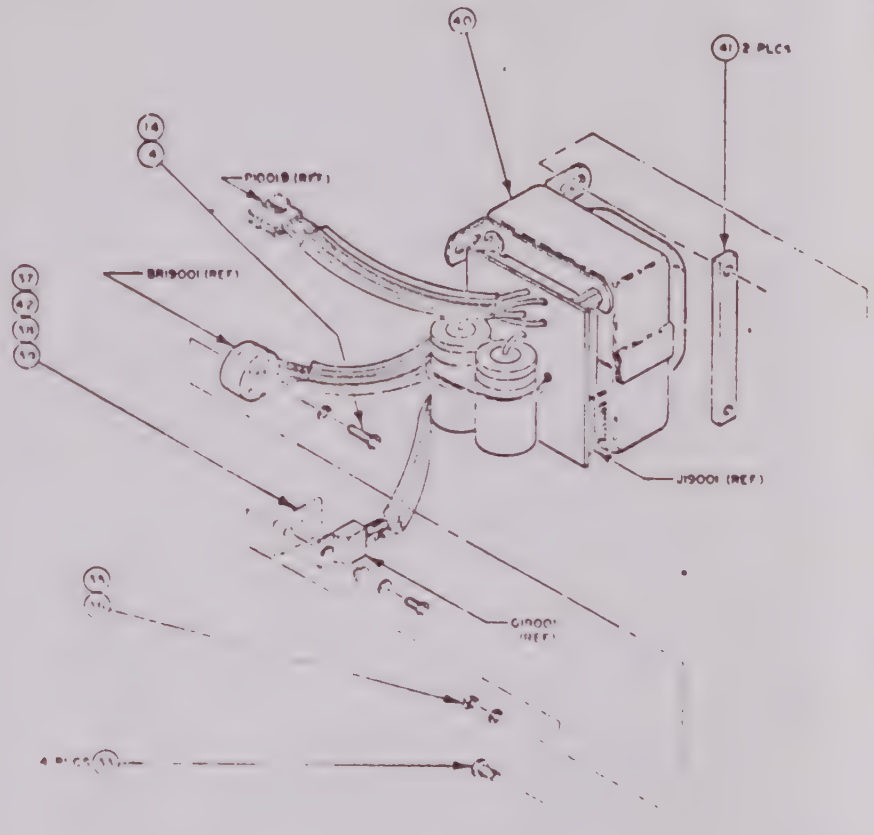

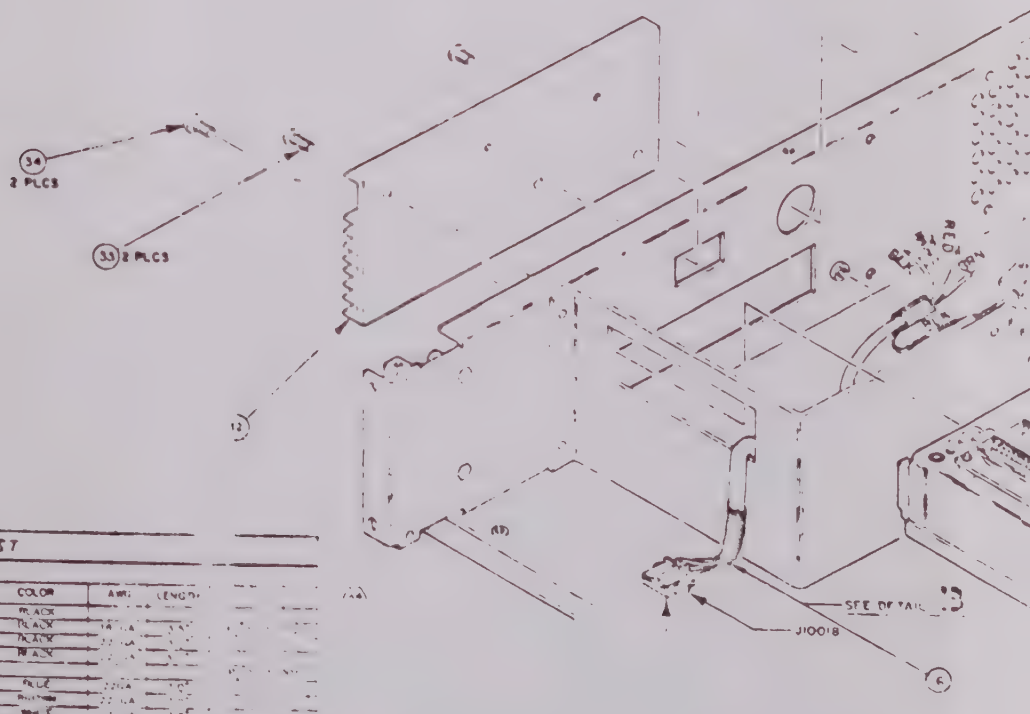

WIRE RUNNING LIST

LINE NO	FROM TERMINAL	FROM NOTES	TO TERMINAL	TO NOTES	COLOR	AWG	LENGTH
1		SQ1			BLACK		
2				HEAT SHRINK	BLACK		
3					BLACK		
4					BLACK		
5				BUS WIRE			
6							
7					BLUE		
8							
9							
10							
11							
12				HEAT SHRINK	BLACK		
13		SQ1		SHIELD WIRE	BLACK		
14		SQ1					
15		SQ1					
16		SQ1					
17		BLACK WIRE	BLACK WIRE		BLACK		
18		BLACK WIRE			BLACK		
19		SHIELD WIRE			BLACK		
20		W/C			BLACK		

ITR	REV	CHANGE	DATE
		SEE SHEET ONE	

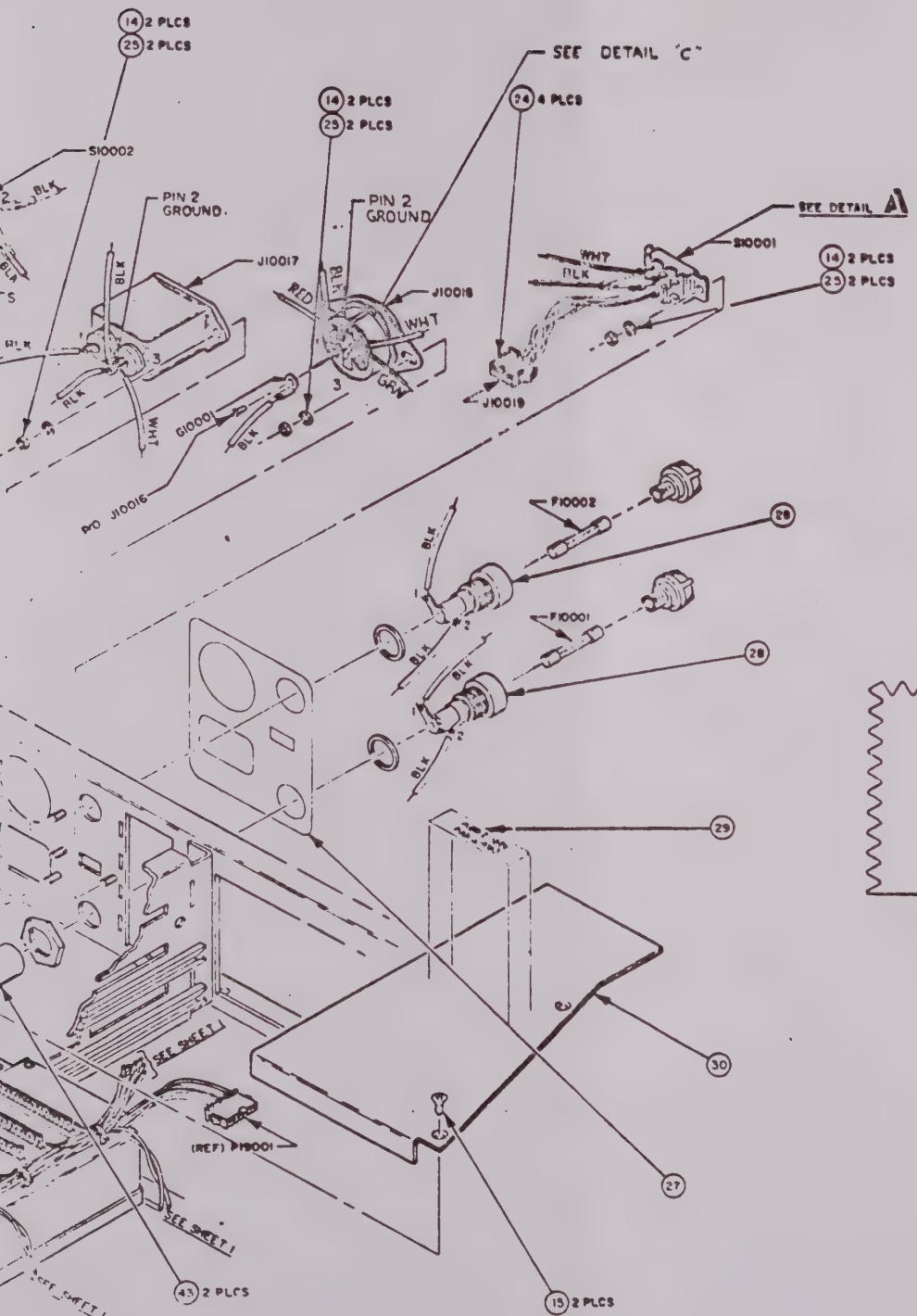

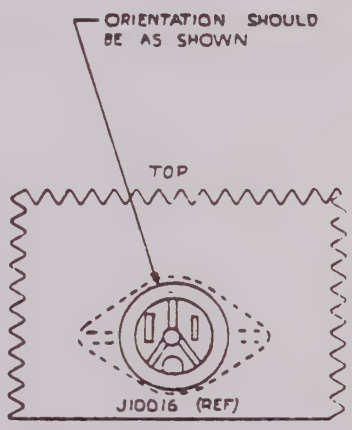

DETAIL C
SHOWN ASSEMBLED

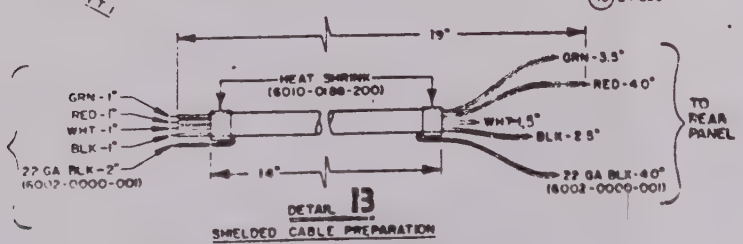

DETAIL 13
SHIELDED CABLE PREPARATION

A.OSBURN 3-5-91	COMPOSITE ASSY	
	S-403C W/MLD	
	7003-8840-100	REV A
	SCALE NONE	SHEET 2 OF 3

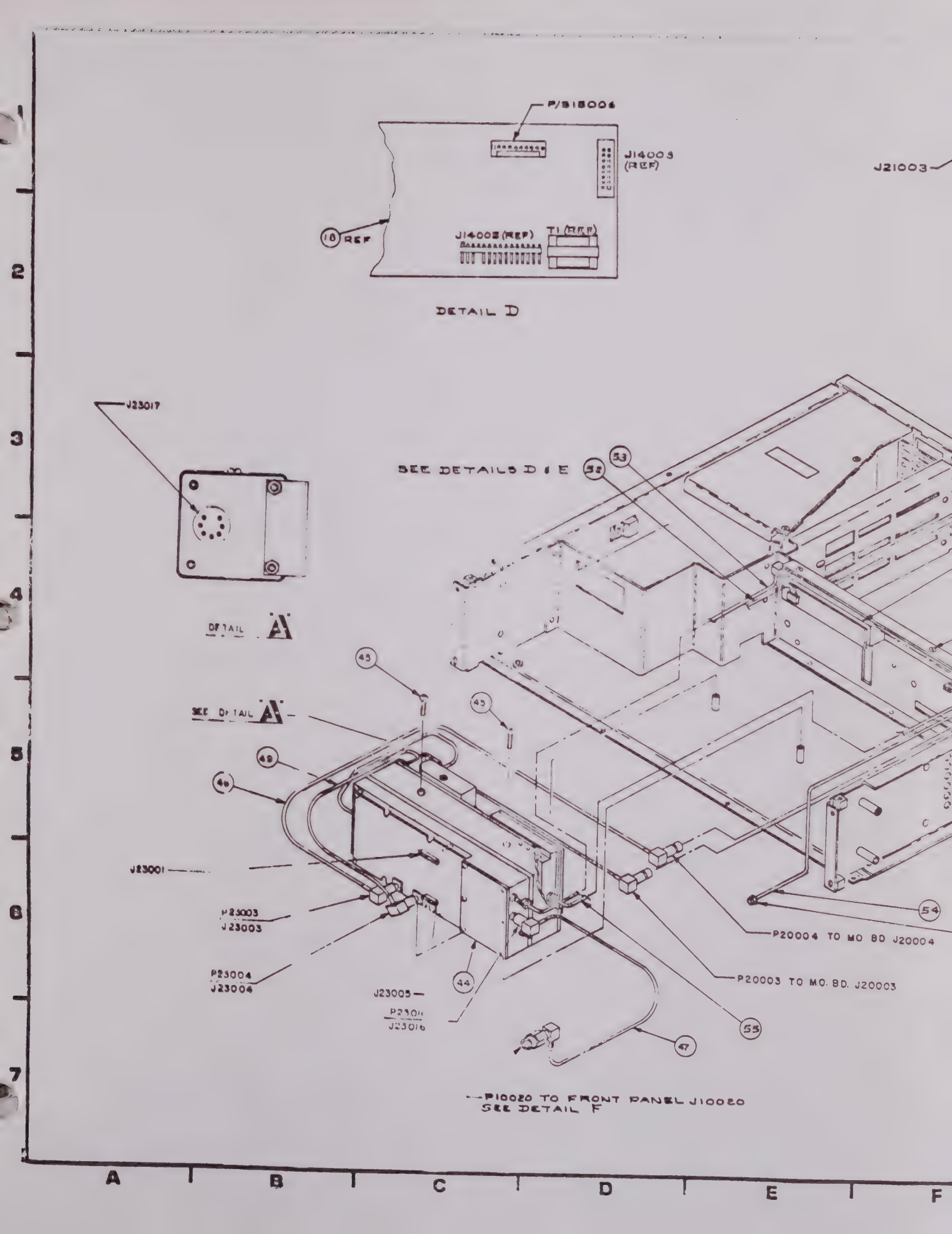
P/S15004
J14003 (REF)
J21003
10 REF
J14003 (REF)
T1 (REF)
DETAIL D
J23017
SEE DETAILS D & E
52
53
DETAIL A
SEE DETAIL A
43
45
48
46
J23001
P23003
J23003
P23004
J23004
J23005
P23016
J23016
44
47
55
54
P20004 TO MO BD J20004
P20003 TO MO. BD. J20003
P10020 TO FRONT PANEL J10020
SEE DETAIL F
1
2
3
4
5
6
7
A
B
C
D
E
F

SEE SHEET ONE

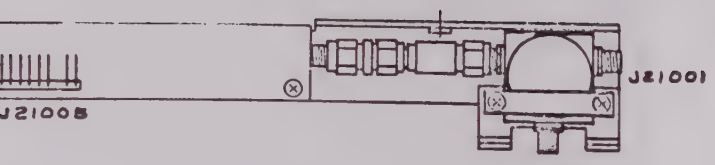

DETAIL E

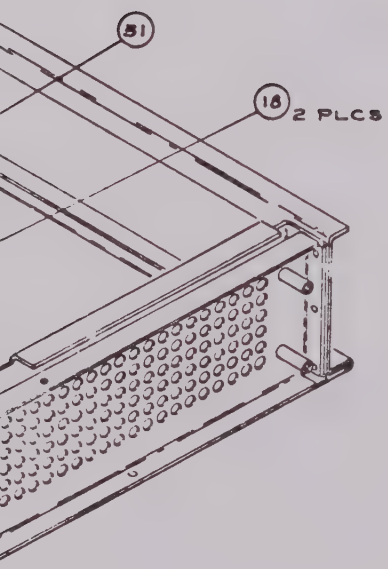

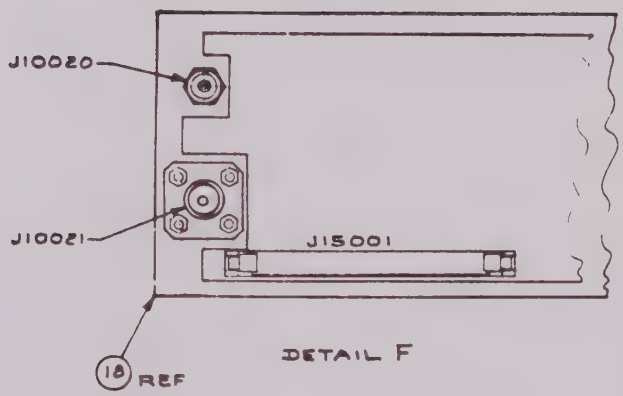

DETAIL F

0021 TO FRONT PANEL J10021
E DETAIL F

	IFR SYSTEMS INC	
A.OSBURN 2-6-91	COMPOSITE ASSY S-1403C W/MLD	
	D 7003-8840-100	A
SCALE NONE	SHEET 3 OF 3	

G H J K L

PRINT DATE 91/06/19 BILL OF MATERIAL LISTED BY REF. DESIG. PAGE 1 STA

ASSY NO.	REVISION	DESCRIPTION	LAST ECN	DATE INC
7003-8840-100	A	COMPOSITE ASSY, S-1403C W/MLD		10/30/71

STAT	REF.DES.	QTY	COMP. PART NO.	DESCRIPTION	EFFECTIVE
ACT		1.00	6002-0000-001	WIRE,HOOK,TFE,22GA, 7S,BLACK	87/05/05
ACT		.60	6002-0000-002	WIRE,HOOK,TFE,22GA, 7S,BROWN	87/05/05
ACT		.30	6002-0000-003	WIRE,HOOK,TFE,22GA, 7S,RED	87/06/16
ACT		.90	6002-0000-006	WIRE,HOOK,TFE,22GA, 7S,GREEN	87/05/05
ACT		.60	6002-0000-007	WIRE,HOOK,TFE,22GA, 7S,BLUE	87/05/05
ACT		.90	6002-0000-010	WIRE,HOOK,TFE,22GA, 7S,WHITE	87/05/05
ACT	*01	1.00	1414-6750-200	COVER,TOP	87/05/05
ACT	*02	1.00	7010-8830-200	PCB ASSY,PULSE MODE S	00/00/00
ACT	*03	1.00	7010-8831-000	PCB ASSY, PROCESSOR	00/00/00
ACT	*04	3.00	2803-0438-006	SCREW,4-40 X 7/16 PPHM	87/05/05
ACT	*05	1.00	7010-8831-100	PCB ASSY, MOTHERBOARD	00/00/00
ACT	*06	3.00	2803-0500-006	SCREW,4-40 X 1/2 PPHM	87/06/16
ACT	*07	4.00	4104-0000-001	CARD GUIDE NATURAL 23071-5	87/05/05
ACT	*08	4.00	2803-1188-006	SCREW,4-40 X 1 3/16 PPHMS	87/05/05
ACT	*09	1.00	1414-6752-000	COVER,RIGHT SIDE	00/00/00
ACT	*10	8.00	2804-0500-003	SCREW,6-32 X 1/2 PFHM	87/05/05
ACT	*11	2.00	1414-6752-100	COVER,RACK MTG	87/05/14
ACT	*12	2.00	1402-6750-900	RAIL,SIDE	87/05/05
ACT	*13	4.00	2850-0000-008	NUT,HEX,REG PAT,4-40	87/05/05
ACT	*14	11.00	2840-0000-003	WASHER,LOCK,INT TOOTH,4	87/05/05
ACT	*15	18.00	2803-0250-003	SCREW,4-40 X 1/4 PFHM	87/05/
ACT	*16	1.60	6040-7730-504	CABLE,SQ1,4C,24GA	87/05/05
ACT	*17	2.00	2410-6751-300	BAR,TRIM FRONT PANEL	87/05/05
ACT	*18	1.00	7005-8841-100	MECH ASSY,FRONT PANEL W/MLD	00/00/00
ACT	*19	4.00	1421-0002-438	FOOT,RBR HEMI,W/6-32 X 1/4 STD	87/05/05
ACT	*20	1.00	1414-6751-900	COVER,LEFT SIDE	00/00/00

ASSY NO.	REVISION	DESCRIPTION	LAST ECN	DATE INC
7003-8840-100	A	COMPOSITE ASSY, S-1403C W/MLD		10/30/71

STAT	REF.DES.	QTY	COMP. PART NO.	DESCRIPTION	EFFECTIVE
ACT	*21	1.00	6500-6880-600	MINOR ASSY,CHASSIS	00/00/00
ACT	*22	1.00	2601-6751-800	FILTER,FAN	00/00/00
ACT	*23	2.00	2114-9001-001	CONTACT PIN26-22GA.SYM001T0.6*	87/05/05
ACT	*24	9.00	2114-9002-001	CONTACT SKT26-22GA.SHF001T855*	87/05/05
ACT	*25	6.00	2850-0000-020	NUT,HEX,SMALL PAT,4-40	87/05/05
ACT	*26	.15	6010-0188-200	TUBING,HS, 3/16 ID,BLACK	87/05/05
ACT	*27	1.00	2403-6751-400	OVERLAY,REAR PANEL	00/00/00
ACT	*28	2.00	5105-0501-000	HOLDER,FUSE,BUSSMAN HTA	00/00/00
ACT	*29	1.00	2400-8002-000	LABEL,CAUTION,120/240V	00/00/00
ACT	*30	1.00	1414-6751-700	COVER,HIGH VOLTAGE	00/00/00
ACT	*31	1.00	7005-6840-100	MECH ASSY, POWER SUPPLY	00/00/00
ACT	*32	1.00	5400-6751-500	HEATSINK,POWER SUPPLY	00/00/00
ACT	*33	6.00	2804-0313-006	SCREW 6-32X5/16 PHIL BIND HD	87/05/05
ACT	*34	2.00	2804-0250-006	SCREW,6-32 X 1/4 PPHM	87/05/05
ACT	*35	1.00	2840-0000-001	WASHER,LOCK,INT TOOTH,6	87/05/14
ACT	*36	1.00	2850-0000-002	NUT,HEX,SMALL PAT,6-32	87/05/14
ACT	*37	1.00	2803-0250-006	SCREW,4-40 X 1/4 PPHM	87/05/05
ACT	*38	1.00	2840-6153-500	WASHER PPS SHOULDER *	87/06/16
ACT	*39	1.00	4835-0000-103	INSUL,MICA,TO-220 TRANS,DF103B	87/06/16
ACT	*40	1.00	7010-6730-800	PCB ASSY,LINE SUPPLY	00/00/00
ACT	*41	2.00	1400-5157-000	BRACKET,XFMR MTG BAR,	00/00/00
ACT	*42	1.00	2840-0000-009	WASHER,FLAT,4,MS15795-803	87/05/05
ACT	*43	2.00	6007-0000-001	CAP,S ID.375-RED 1 INCH	00/00/00
ACT	*44	1.00	7005-8840-900	MECH ASSY,DIVERSITY W/MLD	00/00/00
ACT	*45	2.00	2804-1375-006	SCREW,6-32 X 1 3/8 PPHMS	00/00/00
ACT	*46	1.00	6050-0361-550	COAX ASSY,FLEXIBLE,RG 316/U	00/00/00

ASSY NO.	REVISION	DESCRIPTION	LAST ECN	DATE INC
7003-8840-100	A	COMPOSITE ASSY, S-1403C W/MLD		10/30/71

STAT	REF.DES.	QTY	COMP. PART NO.	DESCRIPTION	EFFECTIVE
ACT	*47	1.00	6050-0560-550	COAX ASSY, 316. RM SMA/RF SMB	00/00/00
ACT	*49	1.00	6050-0361-700	COAX ASSY,FLEXIBLE,RG 316/U	00/00/00
ACT	*50	.00	1050-0000-170	TAPE,DBL BKD VINYL FOAM,3/4"	00/00/00
ACT	*51	1.00	7005-8841-200	MECH ASSY,ATTENUATOR	00/00/00
ACT	*52	1.00	7007-8880-200	WIRE HARN ASSY,FT PNL ATTEN	00/00/00
ACT	*53	1.00	6044-1201-350	COAX CONF SL SMA STR-SMA STR	00/00/00
ACT	*54	1.00	6042-8880-000	COAX ASSY,.141,RFI/O-CIRCLTR	00/00/00
ACT	*55	1.00	6042-8880-100	COAX ASSY,.141,CIRCLTR-PWR TRM	00/00/00
ACT	B10001	1.00	2600-0007-000	FAN, 12VDC,2.362SQ,17.7CFM	00/00/00
ACT	B10001-J1	1.00	2115-9001-002	CONN,RECT.098 RCPT 2-P *	00/00/00
ACT	F10001	1.00	5106-0300-600	FUSE,1.25,GL,FAST,250V,3.0A	00/00/00
ACT	F10002	1.00	5106-0000-026	FUSE,1.25,GL,MED, 250V,0.50A	00/00/00
ACT	G10001	1.00	2850-0000-015	LUG,GND,4	00/00/00
ACT	J10016	1.00	2220-1001-000	CONN,POWER,AC PRIMARY,125V,15A	00/00/00
ACT	J10017	1.00	2220-1021-100	CONN, PWR, FLTR AC, MALE RCPT*	00/00/00
ACT	J10018	2.00	2115-9002-005	CONN,RECT.098 PLUG 5-P,SMP05VB	00/00/00
ACT	J10019	-.--	2115-9002-005	CONN,RECT.098 PLUG 5-P,SMP05VB	00/00/00
ACT	S10001	1.00	5135-2025-500	SWITCH,SLIDE,DPDT,115V/230V	00/00/00
ACT	S10002	1.00	4800-0000-012	THERMOSTAT,SPST,5A,160-170+-5	87/05/14

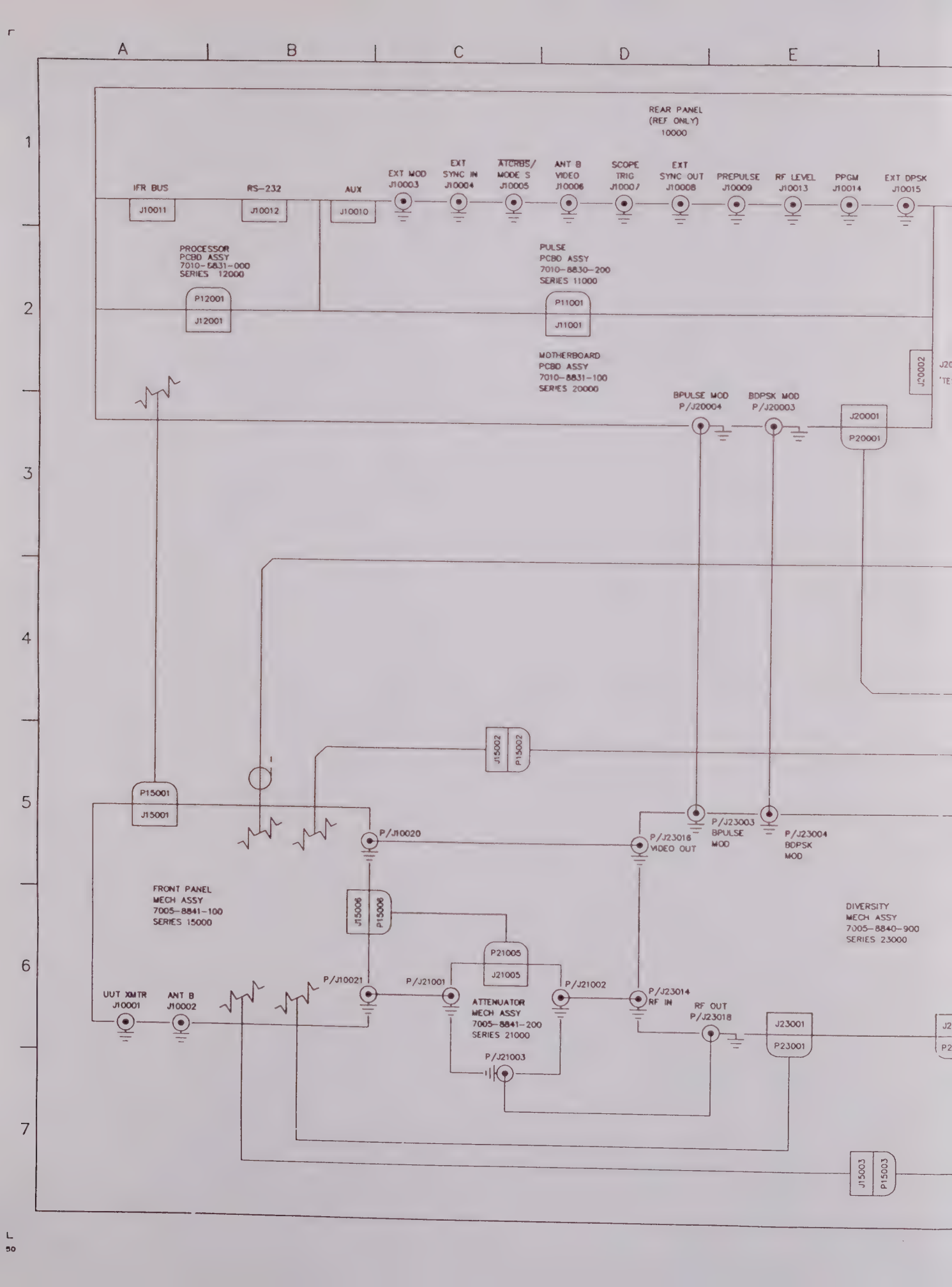
A
B
C
D
E
1
2
3
4
5
6
7
REAR PANEL
(REF ONLY)
10000
IFR BUS
J10011
RS-232
J10012
AUX
J10010
EXT MOD
J10003
EXT
SYNC IN
J10004
ATCRBS/
MODE S
J10005
ANT B
VIDEO
J10006
SCOPE
TRIG
J10007
EXT
SYNC OUT
J10008
PREPULSE
J10009
RF LEVEL
J10013
PPGM
J10014
EXT DPSK
J10015
PROCESSOR
PCBO ASSY
7010-8831-000
SERIES 12000
P12001
J12001
PULSE
PCBO ASSY
7010-8830-200
SERIES 11000
P11001
J11001
MOTHERBOARD
PCBO ASSY
7010-8831-100
SERIES 20000
J20002
BPULSE MOD
P/J20004
BDPSK MOD
P/J20003
J20001
P20001
J15002
P15002
P15001
J15001
P/J10020
P/J23016
VIDEO OUT
P/J23003
BPULSE
MOD
P/J23004
BDPSK
MOD
FRONT PANEL
MECH ASSY
7005-8841-100
SERIES 15000
J15006
P15006
DIVERSITY
MECH ASSY
7005-8840-900
SERIES 23000
P21005
J21005
P/J10021
P/J21001
P/J21002
P/J23014
RF IN
UUT XMTR
J10001
ANT B
J10002
ATTENUATOR
MECH ASSY
7005-8841-200
SERIES 21000
RF OUT
P/J23018
J23001
P23001
P/J21003
J15003
P15003

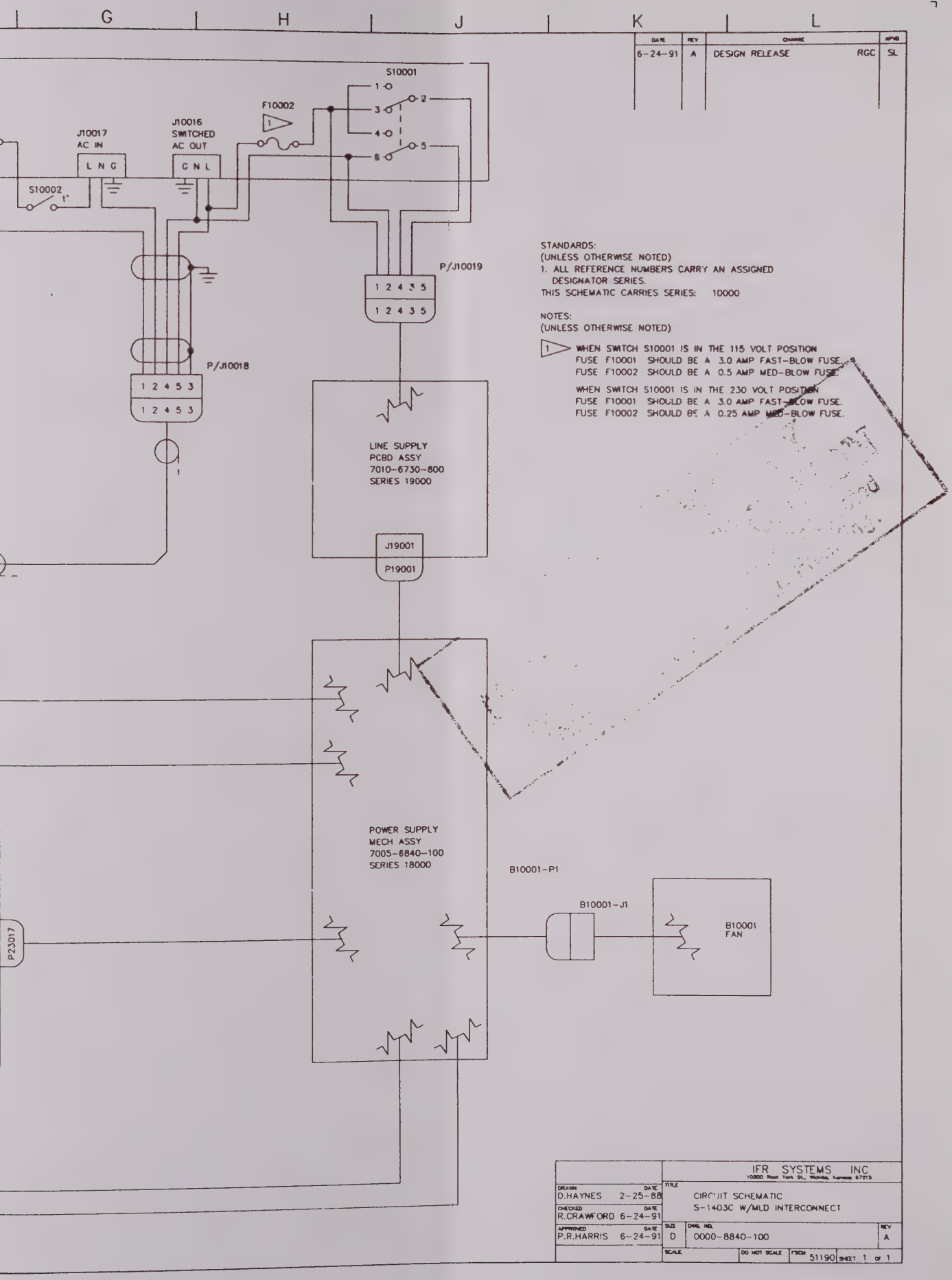
G
H
J
K
L
DATE
REV
CHANGE
APVD
6-24-91
A
DESIGN RELEASE
RGC
SL
S10001
1
2
3
4
5
6
F10002
1
J10017
AC IN
L N G
J10016
SWITCHED
AC OUT
G N L
S10002
1*
P/J10019
1 2 4 3 5
1 2 4 3 5
P/J10018
1 2 4 5 3
1 2 4 5 3
LINE SUPPLY
PCBD ASSY
7010-6730-800
SERIES 19000
J19001
P19001
POWER SUPPLY
MECH ASSY
7005-6840-100
SERIES 18000
B10001-P1
B10001-J1
B10001
FAN
P23017
STANDARDS:
(UNLESS OTHERWISE NOTED)
1. ALL REFERENCE NUMBERS CARRY AN ASSIGNED
DESIGNATOR SERIES.
THIS SCHEMATIC CARRIES SERIES: 10000
NOTES:
(UNLESS OTHERWISE NOTED)
1 WHEN SWITCH S10001 IS IN THE 115 VOLT POSITION
FUSE F10001 SHOULD BE A 3.0 AMP FAST-BLOW FUSE.
FUSE F10002 SHOULD BE A 0.5 AMP MED-BLOW FUSE.
WHEN SWITCH S10001 IS IN THE 230 VOLT POSITION
FUSE F10001 SHOULD BE A 3.0 AMP FAST-BLOW FUSE.
FUSE F10002 SHOULD BE A 0.25 AMP MED-BLOW FUSE.
IFR SYSTEMS INC.
10300 West York St. Wichita, Kansas 67213
DRAWN
D.HAYNES 2-25-88
CHECKED
R.CRAWFORD 6-24-91
APPROVED
P.R.HARRIS 6-24-91
TITLE
CIRCUIT SCHEMATIC
S-1403C W/MLD INTERCONNECT
SIZE
D
DWG. NO.
0000-8840-100
REV
A
SCALE
DO NOT SCALE
FSCM
51190
SHEET 1 OF 1

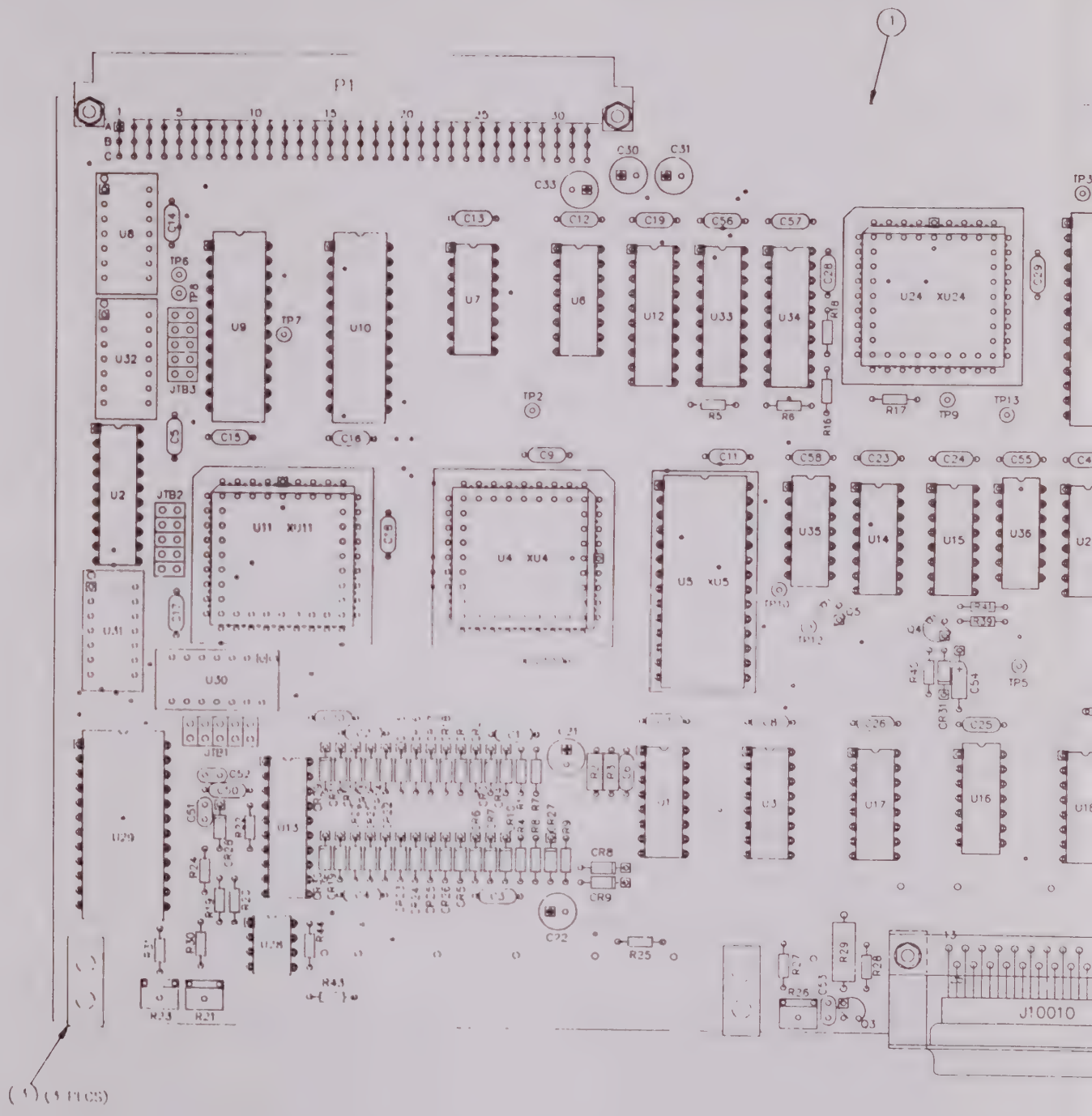

(1) (5 PLCS)

DETAIL "A"

WIRE RUNNING LIST

FROM	TO	SIZE	L
E1	J10003	ITEMS 11 & 17	AS
E2	J10004	ITEMS 11 & 17	AS
E3	J10005	R36	
E4	J10006	R38	
E6	J10007	R33	
E7	J10008	R34	
E8	J10009	R37	
E13	J10013	ITEMS 11 & 17	AS
E14	J10014	R35	
E15	J10015	ITEMS 11 & 17	AS

DATE	REV	CHANGE	APVD
5 30 91	A	DESIGN RELEASE	SL

RELEASE
THROUGH
3 1991
ENGINEERING

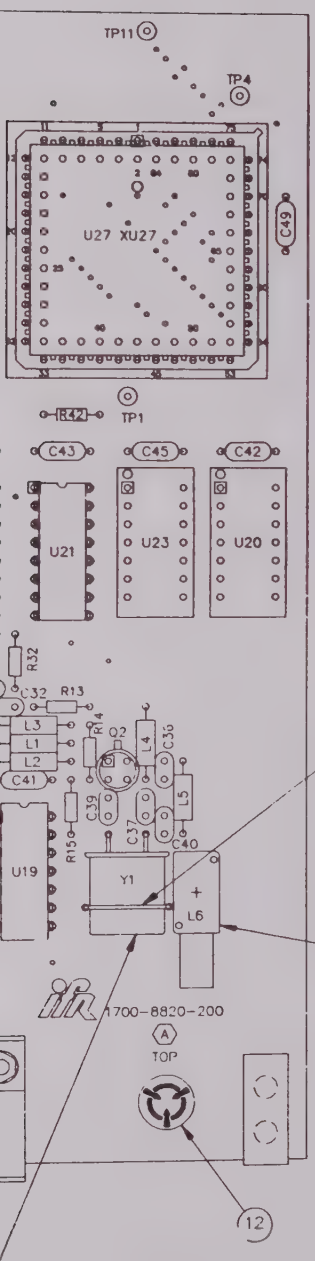

NOTES:

1. ALL REFERENCE DESIGNATORS CARRY AN ASSIGNED DESIGNATOR SERIES, THIS DWG. CARRIES SERIES 11000 (i.e., R1 IS R11001).
2. CRYSTAL CASE MUST NOT BE HEATED, DO NOT ALLOW SOLDER TO FLOW OR COME IN CONTACT WITH CRYSTAL CASE.
3. SLEEVE LEADS OF RESISTORS R35, R36 AND R38 WITH ITEM 17.
4. REMOVE CORE FROM L6 BEFORE PLACING IN CLEANER.
5. REFERENCE SCHEMATIC: 0000-8830-200

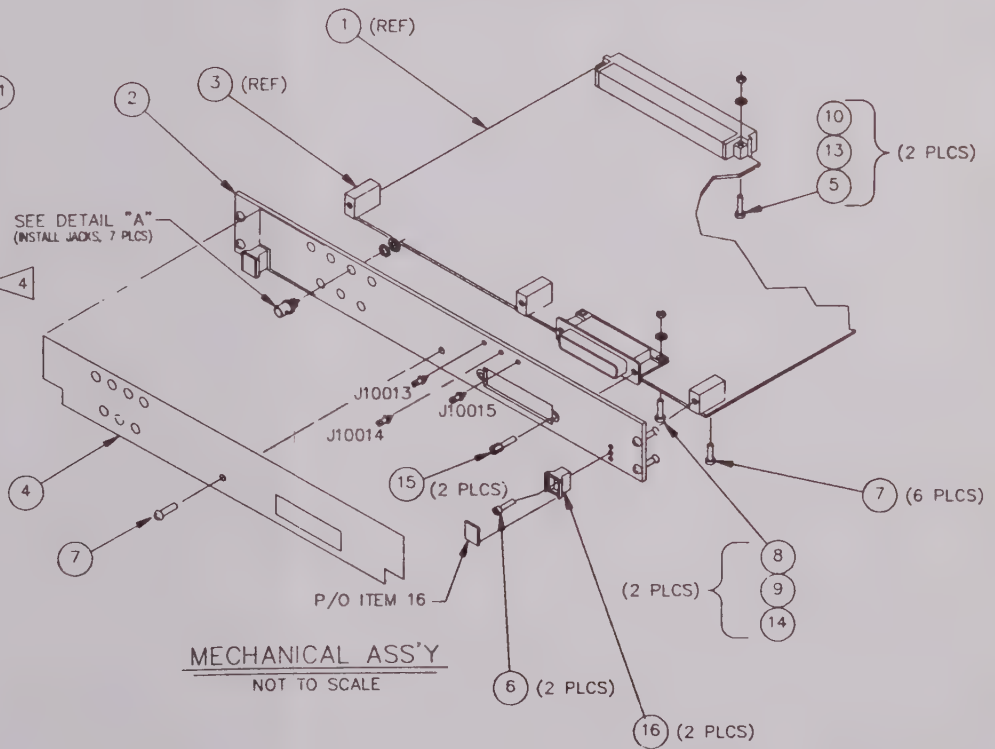

MECHANICAL ASS'Y
NOT TO SCALE

CAUTION:
CONTAINS PARTS AND ASSEMBLIES SUSCEPTIBLE TO DAMAGE BY ELECTROSTATIC DISCHARGE (ESD).

3

3

IFR SYSTEMS INC
10200 West York St., Wichita, Kansas 67215

DRAWN SIGLER 11-15-90	TITLE	PCB ASSEMBLY, PULSE, MODE-S
CHECKED 5/24/91		
APPROVED 5/29/91	SIZE D	DWG. NO. 7010-8830-200 REV A
	SCALE 2:1	DO NOT SCALE CAGE 51190 SHEET 1 OF 1

ASSY NO.	REVISION	DESCRIPTION	LAST ECN	DATE INC
7010-8830-200	A	PCB ASSY,PULSE MODE S		10/30/71

STAT	REF.DES.	QTY	COMP. PART NO.	DESCRIPTION	EFFECTIVE
ACT	*01	1.00	1700-8820-200	PC BD, PULSE BD. MODE S	00/00/00
ACT	*02	1.00	1414-8850-300	COVER,PULSE PC BD ASSY	00/00/00
ACT	*03	3.00	2100-6751-600	BLOCK,PC BD MTG	00/00/00
ACT	*04	1.00	2400-8850-200	LABEL,PULSE ASSY	00/00/00
ACT	*05	2.00	2801-0438-006	SCREW,2-56 X 7/16 PPHM	00/00/00
ACT	*06	2.00	2803-0250-002	SCREW,4-40 X 1/4 SHC	00/00/00
ACT	*07	7.00	2803-0250-006	SCREW,4-40 X 1/4 PPHM	00/00/00
ACT	*08	2.00	2803-0313-006	SCREW,4-40 X 5/16 PPHM	00/00/00
ACT	*09	2.00	2840-0000-003	WASHER,LOCK,INT TOOTH,4	00/00/00
ACT	*10	2.00	2840-0000-004	WASHER,LOCK,INT TOOTH,2	00/00/00
ACT	*11	.08	1050-0000-074	WIRE,BUS,TINNED COPPER,24GA	00/00/00
ACT	*12	1.00	2400-7856-800	LABEL,ESD	00/00/00
ACT	*13	2.00	2850-0000-012	NUT,HEX,SMALL PAT,2-56	00/00/00
ACT	*14	2.00	2850-0000-020	NUT,HEX,SMALL PAT,4-40	00/00/00
ACT	*15	2.00	2850-7601-301	SCREW,.188L4-40.19HH,4-40X.300	00/00/00
ACT	*16	2.00	1407-0000-003	HANDLE,FT PNL,GREY PLASTIC	00/00/00
ACT	*17	.70	6011-0022-001	TUBING,TF,24 AWG,NATURAL,TW	00/00/00
ACT	C11001	41.00	1521-0000-008	CAP,UF .10 50V,DIP Z5U *	00/00/00
ACT	C11002	-.--	1521-0000-008	CAP,UF .10 50V,DIP Z5U *	00/00/00
ACT	C11003	-.--	1521-0000-008	CAP,UF .10 50V,DIP Z5U *	00/00/00
ACT	C11004	-.--	1521-0000-008	CAP,UF .10 50V,DIP Z5U *	00/00/00
ACT	C11005	-.--	1521-0000-008	CAP,UF .10 50V,DIP Z5U *	00/00/00
ACT	C11006	-.--	1521-0000-008	CAP,UF .10 50V,DIP Z5U *	00/00/00
ACT	C11007	-.--	1521-0000-008	CAP,UF .10 50V,DIP Z5U *	00/00/00
ACT	C11008	-.--	1521-0000-008	CAP,UF .10 50V,DIP Z5U *	00/00/00
ACT	C11009	-.--	1521-0000-008	CAP,UF .10 50V,DIP Z5U *	00/00/00

ASSY NO.	REVISION	DESCRIPTION	LAST ECN	DATE INC
7010-8830-200	A	PCB ASSY,PULSE MODE S		10/30/71

STAT	REF.DES.	QTY	COMP. PART NO.	DESCRIPTION	EFFECTIVE
ACT	C11010	-.--	1521-0000-008	CAP,UF .10 50V,DIP Z5U *	00/00/00
ACT	C11011	-.--	1521-0000-008	CAP,UF .10 50V,DIP Z5U *	00/00/00
ACT	C11012	-.--	1521-0000-008	CAP,UF .10 50V,DIP Z5U *	00/00/00
ACT	C11013	-.--	1521-0000-008	CAP,UF .10 50V,DIP Z5U *	00/00/00
ACT	C11014	-.--	1521-0000-008	CAP,UF .10 50V,DIP Z5U *	00/00/00
ACT	C11015	-.--	1521-0000-008	CAP,UF .10 50V,DIP Z5U *	00/00/00
ACT	C11016	-.--	1521-0000-008	CAP,UF .10 50V,DIP Z5U *	00/00/00
ACT	C11017	-.--	1521-0000-008	CAP,UF .10 50V,DIP Z5U *	00/00/00
ACT	C11018	-.--	1521-0000-008	CAP,UF .10 50V,DIP Z5U *	00/00/00
ACT	C11019	-.--	1521-0000-008	CAP,UF .10 50V,DIP Z5U *	00/00/00
ACT	C11020	-.--	1521-0000-008	CAP,UF .10 50V,DIP Z5U *	00/00/00
ACT	C11021	3.00	1580-4702-105	CAP, UF 47, 10V, ELE RDL *	00/0[illegible]
ACT	C11022	-.--	1580-4702-105	CAP, UF 47, 10V, ELE RDL *	00/0[illegible]
ACT	C11023	-.--	1521-0000-008	CAP,UF .10 50V,DIP Z5U *	00/00/00
ACT	C11024	-.--	1521-0000-008	CAP,UF .10 50V,DIP Z5U *	00/0[illegible]
ACT	C11025	-.--	1521-0000-008	CAP,UF .10 50V,DIP Z5U *	00/[illegible]
ACT	C11026	-.--	1521-0000-008	CAP,UF .10 50V,DIP Z5U *	00/[illegible]
ACT	C11027	-.--	1521-0000-008	CAP,UF .10 50V,DIP Z5U *	00/0[illegible]
ACT	C11028	-.--	1521-0000-008	CAP,UF .10 50V,DIP Z5U *	00/00/[illegible]
ACT	C11029	-.--	1521-0000-008	CAP,UF .10 50V,DIP Z5U *	00/00/00
ACT	C11030	2.00	1605-3360-475	CAP,UF 33, 16V,TANT,RDL *	00/00/00
ACT	C11031	-.--	1580-4702-105	CAP, UF 47, 10V, ELE RDL *	00/00/00
ACT	C11032	4.00	1506-0102-017	CAP, pF 1000, 100V, NPO 5 *	00/00/00
ACT	C11033	-.--	1605-3360-475	CAP,UF 33, 16V,TANT,RDL *	00/00/00
ACT	C11034	1.00	1506-0331-017	CAP,PF 330, 100V,NPO, 5	00/00/00
ACT	C11035	1.00	1506-0560-017	CAP,PF 56, 100V,NPO, 5	00/00/00

ASSY NO.	REVISION	DESCRIPTION	LAST ECN	DATE INC
7010-8830-200	A	PCB ASSY,PULSE MODE S		10/30/71

STAT	REF.DES.	QTY	COMP. PART NO.	DESCRIPTION		EFFECTIVE
ACT	C11036	-.--	1506-0102-017	CAP, pF 1000, 100V, NPO 5	*	00/00/00
ACT	C11037	1.00	1506-0470-017	CAP, 47pF 100V NPO	*	00/00/00
ACT	C11038	-.--	1506-0102-017	CAP, pF 1000, 100V, NPO 5	*	00/00/00
ACT	C11039	-.--	1506-0102-017	CAP, pF 1000, 100V, NPO 5	*	00/00/00
ACT	C11040	1.00	1506-0151-017	CAP,PF 150, 100V,NPO, 5		00/00/00
ACT	C11041	-.--	1521-0000-008	CAP,UF .10 50V,DIP Z5U	*	00/00/00
ACT	C11042	-.--	1521-0000-008	CAP,UF .10 50V,DIP Z5U	*	00/00/00
ACT	C11043	-.--	1521-0000-008	CAP,UF .10 50V,DIP Z5U	*	00/00/00
ACT	C11044	-.--	1521-0000-008	CAP,UF .10 50V,DIP Z5U	*	00/00/00
ACT	C11045	-.--	1521-0000-008	CAP,UF .10 50V,DIP Z5U	*	00/00/00
ACT	C11046	-.--	1521-0000-008	CAP,UF .10 50V,DIP Z5U	*	00/00/00
ACT	C11047	-.--	1521-0000-008	CAP,UF .10 50V,DIP Z5U	*	00/00/00
ACT	C11048	-.--	1521-0000-008	CAP,UF .10 50V,DIP Z5U	*	00/00/00
ACT	C11049	-.--	1521-0000-008	CAP,UF .10 50V,DIP Z5U	*	00/00/00
ACT	C11050	-.--	1521-0000-008	CAP,UF .10 50V,DIP Z5U	*	00/00/00
ACT	C11051	1.00	1506-0330-017	CAP,PF 33, 100V,NPO 5		00/00/00
ACT	C11052	1.00	1506-0101-017	CAP,pF 100, 100V NPO 5	*	00/00/00
ACT	C11053	1.00	1506-0121-017	CAP, pF 120, 100V, NPO 5	*	00/00/00
ACT	C11054	1.00	1507-0474-018	CAP,uF .47 35V TANT,20	*	00/00/00
ACT	C11055	-.--	1521-0000-008	CAP,UF .10 50V,DIP Z5U	*	00/00/00
ACT	C11056	-.--	1521-0000-008	CAP,UF .10 50V,DIP Z5U	*	00/00/00
ACT	C11057	-.--	1521-0000-008	CAP,UF .10 50V,DIP Z5U	*	00/00/00
ACT	C11058	-.--	1521-0000-008	CAP,UF .10 50V,DIP Z5U	*	00/00/00
ACT	CR11001	31.00	4815-0000-003	DIODE, 1N4148 ,SIGNAL, 75PRV		00/00/00
ACT	CR11002	-.--	4815-0000-003	DIODE, 1N4148 ,SIGNAL, 75PRV		00/00/00
ACT	CR11003	-.--	4815-0000-003	DIODE, 1N4148 ,SIGNAL, 75PRV		00/00/00

ASSY NO.	REVISION	DESCRIPTION	LAST ECN	DATE INC
7010-8830-200	A	PCB ASSY,PULSE MODE S		10/30/71

STAT	REF.DES.	QTY	COMP. PART NO.	DESCRIPTION	EFFECTIVE
ACT	CR11004	-.--	4815-0000-003	DIODE, 1N4148 ,SIGNAL, 75PRV	00/00/00
ACT	CR11005	-.--	4815-0000-003	DIODE, 1N4148 ,SIGNAL, 75PRV	00/00/00
ACT	CR11006	-.--	4815-0000-003	DIODE, 1N4148 ,SIGNAL, 75PRV	00/00/00
ACT	CR11007	-.--	4815-0000-003	DIODE, 1N4148 ,SIGNAL, 75PRV	00/00/00
ACT	CR11008	-.--	4815-0000-003	DIODE, 1N4148 ,SIGNAL, 75PRV	00/00/00
ACT	CR11009	-.--	4815-0000-003	DIODE, 1N4148 ,SIGNAL, 75PRV	00/00/00
ACT	CR11010	-.--	4815-0000-003	DIODE, 1N4148 ,SIGNAL, 75PRV	00/00/00
ACT	CR11011	-.--	4815-0000-003	DIODE, 1N4148 ,SIGNAL, 75PRV	00/00/00
ACT	CR11012	-.--	4815-0000-003	DIODE, 1N4148 ,SIGNAL, 75PRV	00/00/00
ACT	CR11013	-.--	4815-0000-003	DIODE, 1N4148 ,SIGNAL, 75PRV	00/00/00
ACT	CR11014	-.--	4815-0000-003	DIODE, 1N4148 ,SIGNAL, 75PRV	00/00/00
ACT	CR11015	-.--	4815-0000-003	DIODE, 1N4148 ,SIGNAL, 75PRV	00/00/00
ACT	CR11016	-.--	4815-0000-003	DIODE, 1N4148 ,SIGNAL, 75PRV	00/00/00
ACT	CR11017	-.--	4815-0000-003	DIODE, 1N4148 ,SIGNAL, 75PRV	00/00/00
ACT	CR11018	-.--	4815-0000-003	DIODE, 1N4148 ,SIGNAL, 75PRV	00/00/00
ACT	CR11019	-.--	4815-0000-003	DIODE, 1N4148 ,SIGNAL, 75PRV	00/00/00
ACT	CR11020	-.--	4815-0000-003	DIODE, 1N4148 ,SIGNAL, 75PRV	00/00/00
ACT	CR11021	-.--	4815-0000-003	DIODE, 1N4148 ,SIGNAL, 75PRV	00/00/00
ACT	CR11022	-.--	4815-0000-003	DIODE, 1N4148 ,SIGNAL, 75PRV	00/00/00
ACT	CR11023	-.--	4815-0000-003	DIODE, 1N4148 ,SIGNAL, 75PRV	00/00/00
ACT	CR11024	-.--	4815-0000-003	DIODE, 1N4148 ,SIGNAL, 75PRV	00/00/00
ACT	CR11025	-.--	4815-0000-003	DIODE, 1N4148 ,SIGNAL, 75PRV	00/00/00
ACT	CR11026	-.--	4815-0000-003	DIODE, 1N4148 ,SIGNAL, 75PRV	00/00/00
ACT	CR11027	-.--	4815-0000-003	DIODE, 1N4148 ,SIGNAL, 75PRV	00/00/00
ACT	CR11028	-.--	4815-0000-003	DIODE, 1N4148 ,SIGNAL, 75PRV	00/00/00
ACT	CR11029	-.--	4815-0000-003	DIODE, 1N4148 ,SIGNAL, 75PRV	00/00/00

ASSY NO.	REVISION	DESCRIPTION	LAST ECN	DATE INC
7010-8830-200	A	PCB ASSY,PULSE MODE S		10/30/71

STAT	REF.DES.	QTY	COMP. PART NO.	DESCRIPTION	EFFECTIVE
ACT	CR11030	-.--	4815-0000-003	DIODE, 1N4148 ,SIGNAL, 75PRV	00/00/00
ACT	CR11031	-.--	4815-0000-003	DIODE, 1N4148 ,SIGNAL, 75PRV	00/00/00
ACT	J10001	4.00	0002-0000-000	*** REF DESIG NOT USED ***	00/00/00
ACT	J10002	-.--	0002-0000-000	*** REF DESIG NOT USED ***	00/00/00
ACT	J10003	7.00	2113-0000-020	CONN UG1094/U	00/00/00
ACT	J10004	-.--	2113-0000-020	CONN UG1094/U	00/00/00
ACT	J10005	-.--	2113-0000-020	CONN UG1094/U	00/00/00
ACT	J10006	-.--	2113-0000-020	CONN UG1094/U	00/00/00
ACT	J10007	-.--	2113-0000-020	CONN UG1094/U	00/00/00
ACT	J10008	-.--	2113-0000-020	CONN UG1094/U	00/00/00
ACT	J10009	-.--	2113-0000-020	CONN UG1094/U	00/00/00
ACT	J10010	1.00	2116-0001-000	CONN,D-SUB,F,25-P,PCM,R.A	00/00/00
ACT	J10011	-.--	0002-0000-000	*** REF DESIG NOT USED ***	00/00/00
ACT	J10013	3.00	2123-0000-038	CONN,M SMB,W/TERM,STR BULKHD *	00/00/00
ACT	J10014	-.--	2123-0000-038	CONN,M SMB,W/TERM,STR BULKHD *	00/00/00
ACT	J10015	-.--	2123-0000-038	CONN,M SMB,W/TERM,STR BULKHD *	00/00/00
ACT	J11012	-.--	0002-0000-000	*** REF DESIG NOT USED ***	00/00/00
ACT	JBT11001	3.00	2129-1087-026	CONN,HEADER,26-P,STR,1-87227-3	00/00/00
ACT	JBT11002	-.--	2129-1087-026	CONN,HEADER,26-P,STR,1-87227-3	00/00/00
ACT	JBT11003	-.--	2129-1087-026	CONN,HEADER,26-P,STR,1-87227-3	00/00/00
ACT	L11001	3.00	1801-0479-001	IND, 4.7 uH,1.20HM *	00/00/00
ACT	L11002	2.00	1801-0338-001	IND, .33UH,.2 OHM,1025-08	00/00/00
ACT	L11003	-.--	1801-0479-001	IND, 4.7 uH,1.20HM *	00/00/00
ACT	L11004	-.--	1801-0479-001	IND, 4.7 uH,1.20HM *	00/00/00
ACT	L11005	-.--	1801-0338-001	IND, .33UH,.2 OHM,1025-08	00/00/00
ACT	L11006	1.00	1804-0000-009	IND,VAR, .047-.075UH,ORG 618	00/00/00

ASSY NO.	REVISION	DESCRIPTION	LAST ECN	DATE INC
7010-8830-200	A	PCB ASSY,PULSE MODE S		10/30/71

STAT	REF.DES.	QTY	COMP. PART NO.	DESCRIPTION			EFFECTIVE
ACT	P11001	1.00	2129-1002-196	CONN,RA DIN MALE SHORT 96P		*	00/00/00
ACT	Q11001	1.00	4803-0000-004	TRANS,NPN,LP/VHF AMP			00/00/00
ACT	Q11002	1.00	4809-0100-100	TRANS,55100 NPN HF AMP		*	00/00/00
ACT	Q11003	3.00	4807-0000-001	TRANS, 2N3903 ,NPN HS SW			00/00/00
ACT	Q11004	-.--	4807-0000-001	TRANS, 2N3903 ,NPN HS SW			00/00/00
ACT	Q11005	-.--	4807-0000-001	TRANS, 2N3903 ,NPN HS SW			00/00/00
ACT	R11001	6.00	4701-0102-003	RES, 5, 1/8W, 1.0K	OHM		00/00/00
ACT	R11002	1.00	4706-7500-001	RES, 1, 1/4W, 750	OHM		00/00/00
ACT	R11003	1.00	4706-2490-001	RES, 1, 1/4W, 249	OHM		00/00/00
ACT	R11004	-.--	4701-0102-003	RES, 5, 1/8W, 1.0K	OHM		00/00/00
ACT	R11005	8.00	4701-0472-003	RES, 5, 1/8W, 4.7K	OHM		00/00/00
ACT	R11006	-.--	4701-0472-003	RES, 5, 1/8W, 4.7K	OHM		00/00/00
ACT	R11007	2.00	4701-0471-003	RES, 5, 1/8W, 470	OHM		00/00/00
ACT	R11008	1.00	4701-0221-003	RES, 5, 1/8W, 220	OHM		00/00/00
ACT	R11009	1.00	4701-0220-003	RES,5, 1/8W 22 OHM		*	00/00/00
ACT	R11010	4.00	4701-0103-003	RES, 5, 1/8W, 10K OHM		*	00/00/00
ACT	R11011	1.00	4701-0330-003	RES, 5, 1/8W, 33	OHM		00/00/00
ACT	R11012	1.00	4701-0682-003	RES, 5, 1/8W, 6.8K OHM		*	00/00/00
ACT	R11013	-.--	4701-0471-003	RES, 5, 1/8W, 470	OHM		00/00/00
ACT	R11014	1.00	4701-0393-003	RES, 5, 1/8W, 39K	OHM		00/00/00
ACT	R11015	1.00	4701-0680-003	RES, 5, 1/8W, 68	OHM		00/00/00
ACT	R11016	-.--	4701-0472-003	RES, 5, 1/8W, 4.7K	OHM		00/00/00
ACT	R11017	-.--	4701-0103-003	RES, 5, 1/8W, 10K OHM		*	00/00/00
ACT	R11018	-.--	4701-0472-003	RES, 5, 1/8W, 4.7K	OHM		00/00/00
ACT	R11019	-.--	4701-0103-003	RES, 5, 1/8W, 10K OHM		*	00/00/00
ACT	R11020	-.--	4701-0103-003	RES, 5, 1/8W, 10K OHM		*	00/00/00

ASSY NO.	REVISION	DESCRIPTION	LAST ECN	DATE INC
7010-8830-200	A	PCB ASSY,PULSE MODE S		10/30/71

STAT	REF.DES.	QTY	COMP. PART NO.	DESCRIPTION				EFFECTIVE
ACT	R11021	1.00	4753-0103-002	POT, 10K OHM				00/00/00
ACT	R11022	-.--	4701-0472-003	RES, 5, 1/8W,	4.7K	OHM		00/00/00
ACT	R11023	1.00	4753-0203-002	POT 20K OHM				00/00/00
ACT	R11024	-.--	4701-0102-003	RES, 5, 1/8W,	1.0K	OHM		00/00/00
ACT	R11025	-.--	4701-0102-003	RES, 5, 1/8W,	1.0K	OHM		00/00/00
ACT	R11026	1.00	4753-0102-002	POT 1K OHM				00/0[illegible]
ACT	R11027	1.00	4701-0222-003	RES, 5, 1/8W,	2.2K	OHM		00/0[illegible]
ACT	R11028	1.00	4701-0470-003	RES, 5, 1/8W,	47	OHM		00/0[illegible]
ACT	R11029	1.00	4703-0471-003	RES, 5, 1/2W,	470	OHM		00/0[illegible]
ACT	R11030	1.00	4701-0823-003	RES, 5, 1/8W,	82K	OHM		00/0[illegible]
ACT	R11031	1.00	4701-0473-003	RES, 5, 1/8W,	47K OHM		*	00/0[illegible]
ACT	R11032	1.00	4701-0820-003	RES, 5, 1/8W,	82 OHM		*	00/0[illegible]
ACT	R11033	6.00	4702-0390-003	RES, 5, 1/4W,	39	OHM		00/00/[illegible]
ACT	R11034	-.--	4702-0390-003	RES, 5, 1/4W,	39	OHM		00/00/00
ACT	R11035	-.--	4702-0390-003	RES, 5, 1/4W,	39	OHM		00/00/00
ACT	R11036	-.--	4702-0390-003	RES, 5, 1/4W,	39	OHM		00/00/00
ACT	R11037	-.--	4702-0390-003	RES, 5, 1/4W,	39	OHM		00/00/00
ACT	R11038	-.--	4702-0390-003	RES, 5, 1/4W,	39	OHM		00/00/00
ACT	R11039	-.--	4701-0102-003	RES, 5, 1/8W,	1.0K	OHM		00/00/00
ACT	R11040	1.00	4701-0105-003	RES, 5, 1/8W,	1.0MEG	OHM		00/00/00
ACT	R11041	-.--	4701-0102-003	RES, 5, 1/8W,	1.0K	OHM		00/00/00
ACT	R11042	-.--	4701-0472-003	RES, 5, 1/8W,	4.7K	OHM		00/00/00
ACT	R11043	-.--	4701-0472-003	RES, 5, 1/8W,	4.7K	OHM		00/00/00
ACT	R11044	-.--	4701-0472-003	RES, 5, 1/8W,	4.7K	OHM		00/00/00
ACT	TP11001	13.00	2114-0000-007	POST,GANG,PCB,.025SQ,.443LG			*	00/00/00
ACT	TP11002	-.--	2114-0000-007	POST,GANG,PCB,.025SQ,.443LG			*	00/00/00

ASSY NO.	REVISION	DESCRIPTION	LAST ECN	DATE INC
7010-8830-200	A	PCB ASSY,PULSE MODE S		10/30/71

STAT	REF.DES.	QTY	COMP. PART NO.	DESCRIPTION		EFFECTIVE
ACT	TP11003	-.--	2114-0000-007	POST,GANG,PCB,.025SQ,.443LG	*	00/00/00
ACT	TP11004	-.--	2114-0000-007	POST,GANG,PCB,.025SQ,.443LG	*	00/00/00
ACT	TP11005	-.--	2114-0000-007	POST,GANG,PCB,.025SQ,.443LG	*	00/00/00
ACT	TP11006	-.--	2114-0000-007	POST,GANG,PCB,.025SQ,.443LG	*	00/00/00
ACT	TP11007	-.--	2114-0000-007	POST,GANG,PCB,.025SQ,.443LG	*	00/00/00
ACT	TP11008	-.--	2114-0000-007	POST,GANG,PCB,.025SQ,.443LG	*	00/00/00
ACT	TP11009	-.--	2114-0000-007	POST,GANG,PCB,.025SQ,.443LG	*	00/00/00
ACT	TP11010	-.--	2114-0000-007	POST,GANG,PCB,.025SQ,.443LG	*	00/00/00
ACT	TP11011	-.--	2114-0000-007	POST,GANG,PCB,.025SQ,.443LG	*	00/00/00
ACT	TP11012	-.--	2114-0000-007	POST,GANG,PCB,.025SQ,.443LG	*	00/00/00
ACT	TP11013	-.--	2114-0000-007	POST,GANG,PCB,.025SQ,.443LG	*	00/00/00
ACT	U11001	1.00	3134-0000-024	IC,3486,QUAD RS422/423 RCVR		00/0[illegible]
ACT	U11002	1.00	3211-3374-000	IC,74LS374,OCTAL D FLIP-FLOP		00/00/[illegible]
ACT	U11003	1.00	3211-3153-000	IC,74LS153,DUAL 4-TO-1 MPLXR		00/0[illegible]
ACT	U11004	3.00	3271-2064-070	IC,XC2064-70PC68C		00/0[illegible]
ACT	U11005	1.00	3271-2725-601	IC,27C256,32K X 8 EPROM CMOS		00/0[illegible]
ACT	U11006	2.00	3211-3157-000	IC,74LS157,QUAD 2-TO-1 MPLXR		00/0[illegible]
ACT	U11007	-.--	3211-3157-000	IC,74LS157,QUAD 2-TO-1 MPLXR		00/00/[illegible]
ACT	U11008	6.00	3226-0005-000	IC,DIG DELAY UNIT,50 NS TOT		00/00/[illegible]
ACT	U11009	2.00	3260-0000-001	IC,D-RAM,N-MES 64K, 120NS		00/00/00
ACT	U11010	-.--	3260-0000-001	IC,D-RAM,N-MES 64K, 120NS		00/00/00
ACT	U11011	-.--	3271-2064-070	IC,XC2064-70PC68C		00/00/00
ACT	U11012	4.00	3211-3244-000	IC,74LS244,OCTAL BUF/DRVR/RCVR		00/00/0[illegible]
ACT	U11013	-.--	3211-3244-000	IC,74LS244,OCTAL BUF/DRVR/RCVR		00/00/00
ACT	U11014	2.00	3131-0000-045	IC,74LS138,3-TO-8 DCDR/MPLXR		00/00/00
ACT	U11015	-.--	3131-0000-045	IC,74LS138,3-TO-8 DCDR/MPLXR		00/00/00

ASSY NO.	REVISION	DESCRIPTION	LAST ECN	DATE INC
7010-8830-200	A	PCB ASSY,PULSE MODE S		10/30/71

STAT	REF.DES.	QTY	COMP. PART NO.	DESCRIPTION		EFFECTIVE
ACT	U11016	1.00	3211-3032-000	IC,74LS32,QUAD 2-INPUT OR		00/00/00
ACT	U11017	1.00	3215-0000-002	IC,74F85,FAST 4-B MAG COMPARE		00/00/00
ACT	U11018	1.00	3215-0000-003	IC,74F109,FAST D J-K FLIP FLOP		00/00/00
ACT	U11019	1.00	3215-0000-001	IC,74F04,FAST HEX INVERTER		00/00/00
ACT	U11020	-.--	3226-0005-000	IC,DIG DELAY UNIT,50 NS TOT		00/00/00
ACT	U11021	2.00	3215-0000-004	IC,74F161,FAST 4-BIT COUNTER		00/00/00
ACT	U11022	1.00	3215-0000-005	IC,74F374,FAST LATCH/FLIP FLOP		00/00/00
ACT	U11023	-.--	3226-0005-000	IC,DIG DELAY UNIT,50 NS TOT		00/00/00
ACT	U11024	-.--	3271-2064-070	IC,XC2064-70PC68C		00/00/00
ACT	U11025	1.00	3214-4501-015	IC,4501-15,PARA IN/OUT FIFO		00/00/00
ACT	U11026	-.--	3215-0000-004	IC,74F161,FAST 4-BIT COUNTER		00/00/00
ACT	U11027	1.00	3271-3042-070	IC,LOGIC CELL ARRAY	*	00/00/00
ACT	U11028	1.00	3135-0000-054	IC,412,DUAL J-FET OP AMP	*	00/00/00
ACT	U11029	1.00	3228-0006-000	IC,5020,10-B D/A CONVERTER		00/00/00
ACT	U11030	-.--	3226-0005-000	IC,DIG DELAY UNIT,50 NS TOT		00/00/00
ACT	U11031	-.--	3226-0005-000	IC,DIG DELAY UNIT,50 NS TOT		00/00/00
ACT	U11032	-.--	3226-0005-000	IC,DIG DELAY UNIT,50 NS TOT		00/00/00
ACT	U11033	-.--	3211-3244-000	IC,74LS244,OCTAL BUF/DRVR/RCVR		00/00/00
ACT	U11034	-.--	3211-3244-000	IC,74LS244,OCTAL BUF/DRVR/RCVR		00/00/00
ACT	U11035	1.00	3131-0000-044	IC,74LS00,QUAD 2-INPUT NAND		00/00/00
ACT	U11036	1.00	3211-3014-000	IC,74LS14,SCHMITT TRIG HEX INV		00/00/00
ACT	XU11004	3.00	3101-0000-031	SOCKET,68-P LCC JEDEC H/P TIN		00/00/00
ACT	XU11005	1.00	3101-0000-029	SOCKET,28-P DIP,GOLD,LO PROFIL		00/00/00
ACT	XU11011	-.--	3101-0000-031	SOCKET,68-P LCC JEDEC H/P TIN		00/00/00
ACT	XU11024	-.--	3101-0000-031	SOCKET,68-P LCC JEDEC H/P TIN		00/00/00
ACT	XU11027	1.00	3101-0000-084	SOCKET, PLCC 84P	*	00/00/00

ASSY NO.	REVISION	DESCRIPTION	LAST ECN	DATE INC
7010-8830-200	A	PCB ASSY,PULSE MODE S		10/30/71

STAT	REF.DES.	QTY	COMP. PART NO.	DESCRIPTION	EFFECTIVE
ACT	Y11001	1.00	2363-0117-000	XTAL, 80.000000MHZ,5 S,HC-18/U	00/00/00

NOTES:
(UNLESS OTHERWISE SPECIFIED)

1. ALL REFERENCE NUMBERS CARRY AN
   DESIGNATOR SERIES.
   THIS SCHEMATIC CARRIES SERIES:
2. ALL RESISTORS ARE 5%, 1/8W.
3. ALL RESISTANCE IS EXPRESSED IN OH
   ALL CAPACITANCE IS EXPRESSED IN M
   ALL INDUCTANCE IS EXPRESSED IN M
4. HIGHEST REFERENCE DESIGNATIONS.
   C58, CR31, J13, JTB3, L6, P1, Q5, R4
5. REFERENCE DESIGNATIONS NOT USED.
   NONE.
6. ALL DIODES ARE IN4148.
7. CONNECTOR PINS NOT CONNECTED AN
   P11001: 17A, 19A, 20A, 22A, 3B–
   31B, 3C, 4C, 6C–8C, 10C
8. IC PINS NOT CONNECTED AND NOT SH
   U4: 14, 19, 38–40, 43, 46, 65.
   U11: 12, 54, 55.
   U24: 2–9, 18, 20–24, 28, 30–3
   36, 39, 41, 58, 62, 64, 65–
   U27: 3–11.
   U30: 2, 3, 5, 9, 11, 13.
   U31: 2, 3, 5, 9, 11, 13.
   U32: 2, 3, 5, 9, 11, 13.
9. IC FUNCTIONS NOT USED:

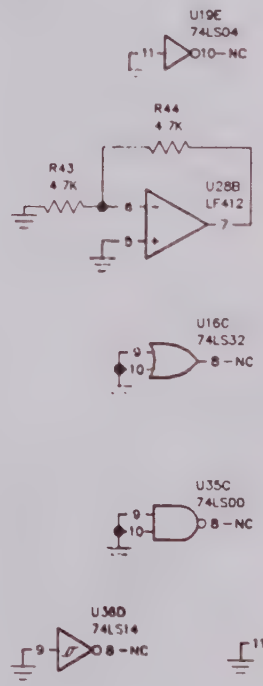

CAUTION:
CONTAINS PARTS AND
SUSCEPTIBLE TO DAMA
ELECTROSTATIC DISCH

G	H	J	K	L

DATE	REV	CHANGE	APVD
5-31-91	A	DESIGN RELEASE RGC	SL

B-29B.
21C, 22C.

U36F
74LS14
O12 - NC

DRAWN R.CHAPMAN 11-29-90	IFR SYSTEMS INC	
CHECKED R.CRAWFORD 5-31-91	TITLE CIRCUIT SCHEMATIC PULSE PCB	
APPROVED P.R.HARRIS 6-5-91	SIZE B	DWG NO. 0000-8830-200 REV A
	SCALE	DO NOT SCALE FSCM 51190 SHEET 1 OF 3

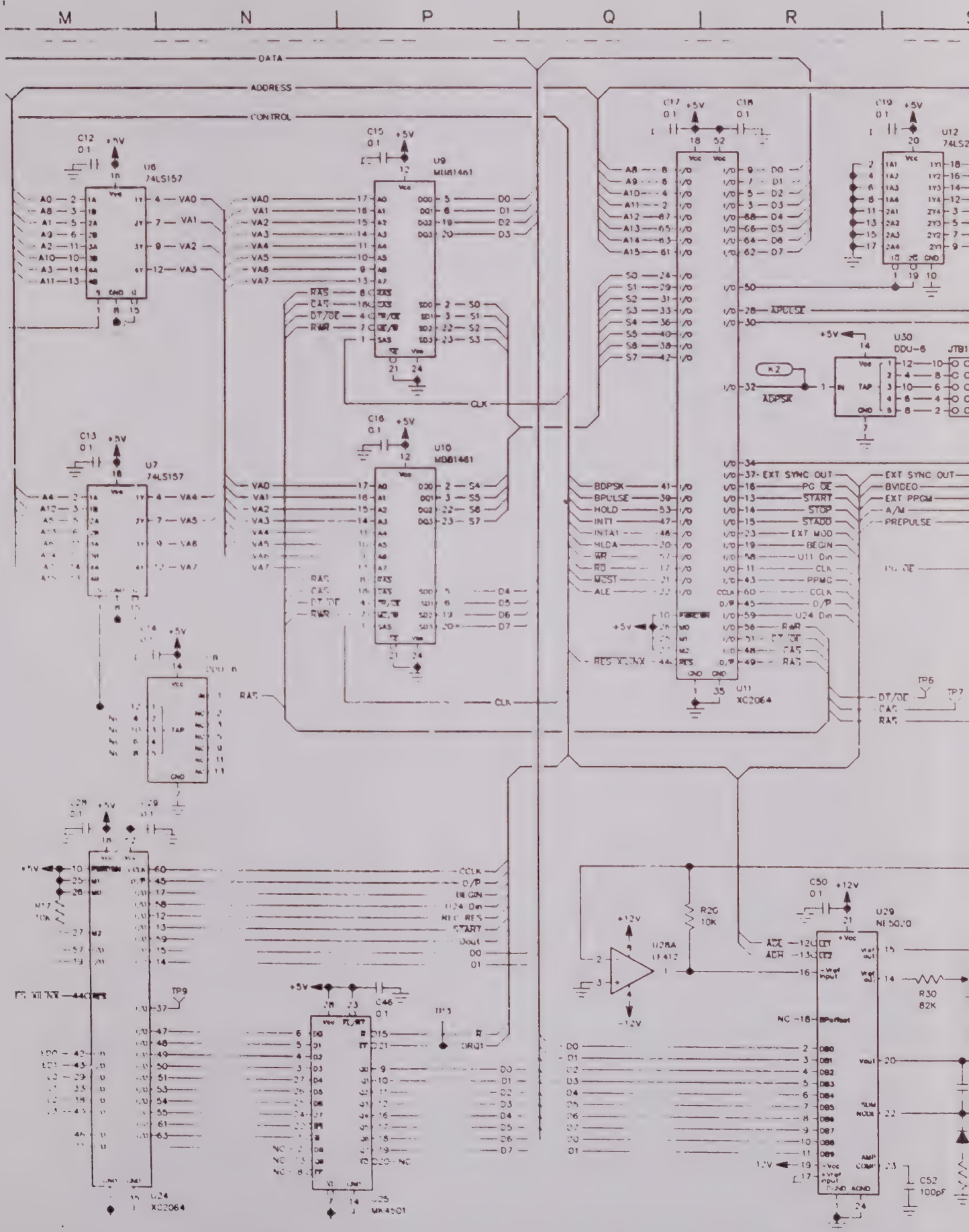
M
N
P
Q
R
DATA
ADDRESS
CONTROL
U6
74LS157
U7
74LS157
U9
MB81461
U10
MB81461
U11
XC2064
U12
74LS2
U30
DDU-6
U24
XC2064
U25
MK4501
U28A
LF412
U29
NE5020
R20
10K
R30
82K
C52
100pF
APULSE
ADPSK
EXT SYNC OUT
PG OE
START
STOP
STADD
EXT MOD
BEGIN
U11 Din
CLK
PPMG
CCLK
D/P
U24 Din
RAS
CAS
DT/OE
RWR
BDPSK
BPULSE
HOLD
INT1
INTA1
HLDA
WR
RD
MCST
ALE
RES XLINX
BVIDEO
EXT PPGM
A/M
PREPULSE
CCLK
D/P
BEGIN
U24 Din
REC RES
START
Dout
D0
D1
D2
D3
D4
D5
D6
D7
DRQ1
TP6
TP7
TP9
+5V
+12V
-12V

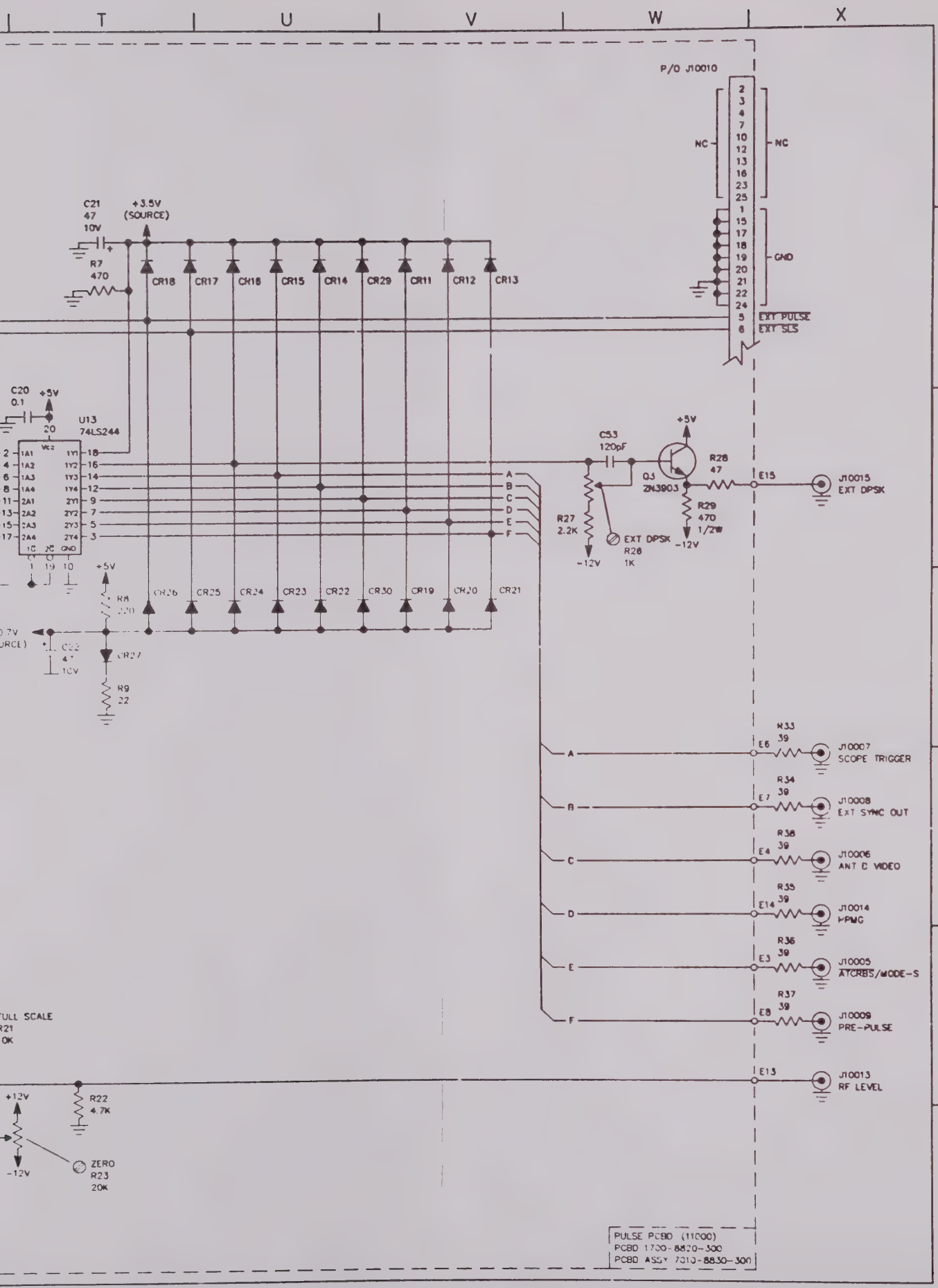
T
U
V
W
X
P/O J10010
NC
NC
GND
EXT PULSE
EXT SLS
C21
47
10V
+3.5V
(SOURCE)
R7
470
CR18
CR17
CR16
CR15
CR14
CR29
CR11
CR12
CR13
C20
0.1
+5V
U13
74LS244
CR26
CR25
CR24
CR23
CR22
CR30
CR19
CR20
CR21
R8
220
CR27
R9
22
C22
47
10V
C53
120pF
Q3
2N3903
R28
47
R27
2.2K
EXT DPSK
R26
1K
R29
470
1/2W
-12V
E15
J10015
EXT DPSK
R33
39
E6
J10007
SCOPE TRIGGER
R34
39
E7
J10008
EXT SYNC OUT
R38
39
E4
J10006
ANT D VIDEO
R35
39
E14
J10014
HPMG
R36
39
E3
J10005
ATCRBS/MODE-S
R37
39
E8
J10009
PRE-PULSE
E13
J10013
RF LEVEL
R22
4.7K
ZERO
R23
20K
PULSE PCBD (11000)
PCBD 1700-8820-300
PCBD ASSY 7010-8830-300

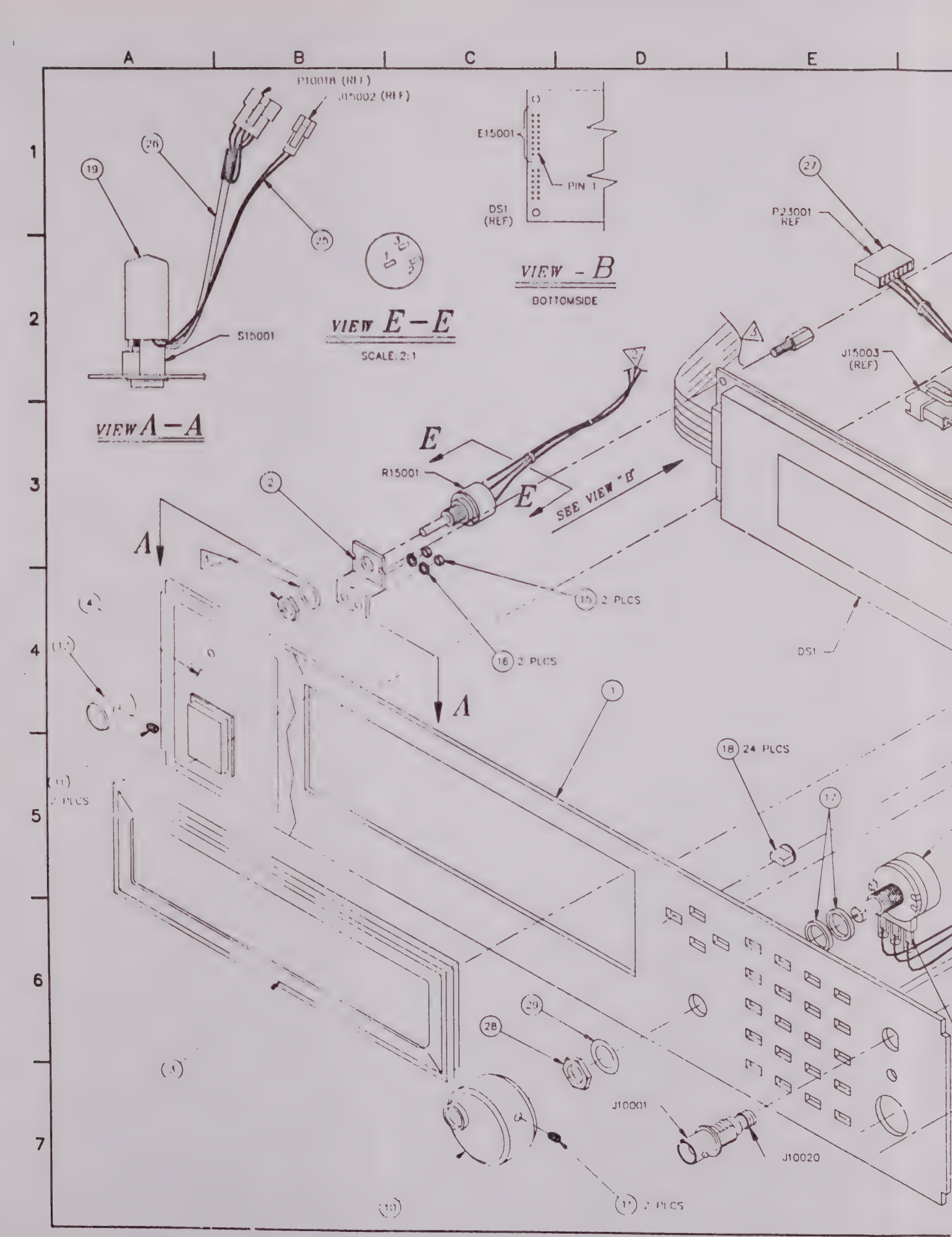
A
B
C
D
E
1
2
3
4
5
6
7
P10018 (REF)
J15002 (REF)
19
28
25
S15001
VIEW A–A
E15001
PIN 1
DS1 (REF)
VIEW – B
BOTTOMSIDE
VIEW E–E
SCALE: 2:1
27
P23001 REF
J15003 (REF)
E
R15001
SEE VIEW "B"
2
15 2 PLCS
16 2 PLCS
DS1
A
4
12
11 2 PLCS
1
18 24 PLCS
17
29
28
J10001
J10020
3
10
11 2 PLCS

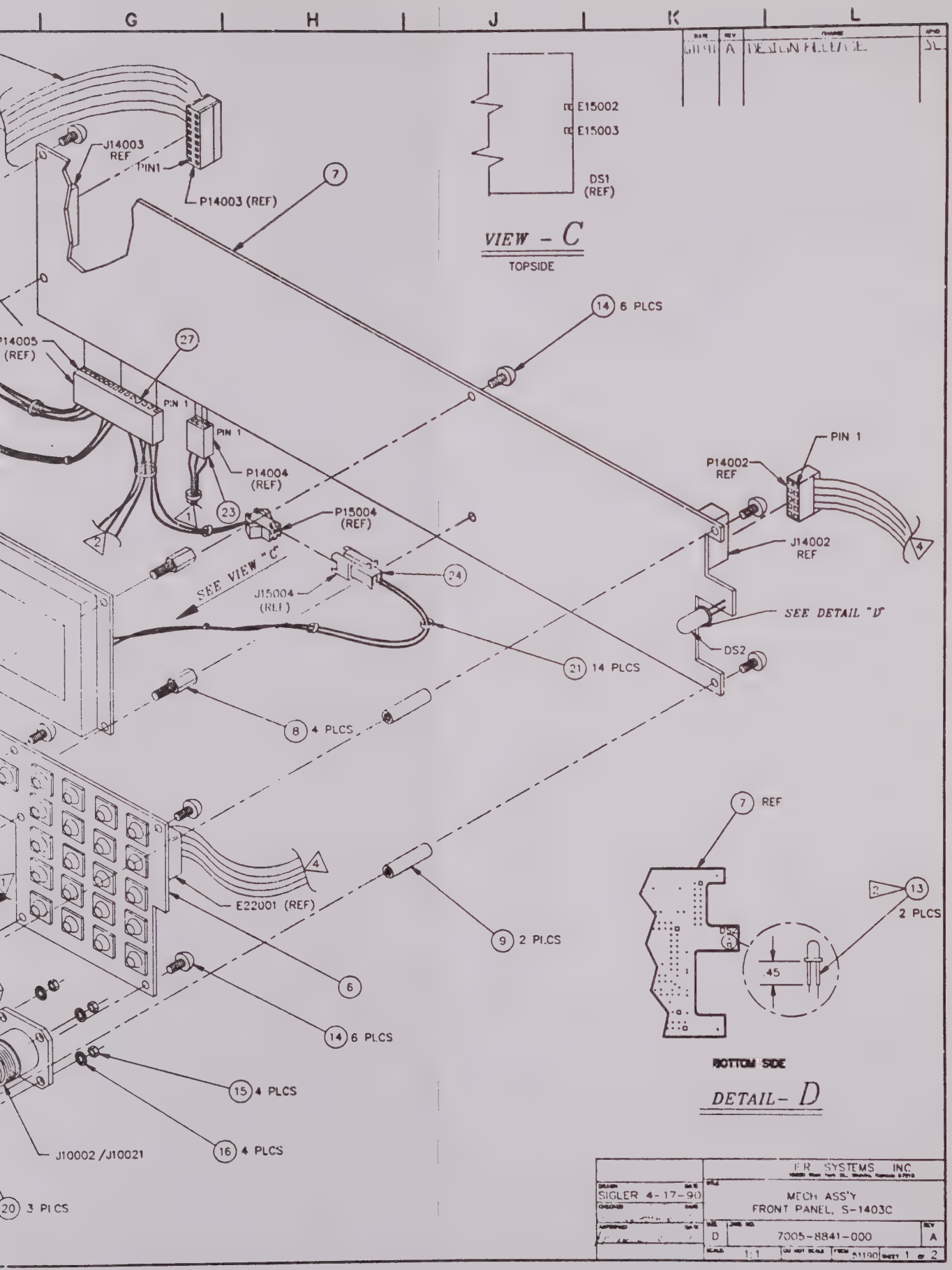
G
H
J
K
L
DESIGN RELEASE
E15002
E15003
DS1
(REF)
VIEW - C
TOPSIDE
J14003
REF
PIN1
P14003 (REF)
7
14 6 PLCS
P14005
(REF)
27
PIN 1
PIN 1
P14004
(REF)
23
P15004
(REF)
SEE VIEW "C"
J15004
(REF)
24
21 14 PLCS
P14002
REF
PIN 1
J14002
REF
SEE DETAIL "D"
DS2
8 4 PLCS
E22001 (REF)
9 2 PLCS
6
14 6 PLCS
15 4 PLCS
16 4 PLCS
J10002 /J10021
20 3 PLCS
7 REF
13
2 PLCS
.45
BOTTOM SIDE
DETAIL - D
ER SYSTEMS INC.
SIGLER 4-17-90
MECH ASS'Y
FRONT PANEL, S-1403C
D
7005-8841-000
A
1:1
SHEET 1 OF 2

WIRE RUNNING LIST

TERMINAL	NOTES	TERMINAL	NOTES	COLOR	AWG	LENGTH	NOTES
ITEM 23-1		RET5001-1		WHT/BRN	26	8"	
-2		-2		WHT/RED			
-3		-3		BLK			
ITEM 22-1		P23001-1		WHT/BLU	26	7"	
-2		-2		WHT/BLK	26	7"	
-3		-3		WHT/VIO	26	7"	
-4		KEY					
-5		P23001-4		WHT/GRN	26	7"	
-6		N/C					
-7		J15003-4		YEL	22	3.5"	
-8		N/C					
-9		J15003-2		RED	22	3.5"	
-10		J15003-1		BLK	22	3.5"	
-11		R15001-2		WHT/RED	26	6"	
-12		R15001-1		WHT	26	6"	
-13		R15001-3		BLK	26	6"	
-14		P15004-1		BLK	26	3.8"	
-15		P15004-2		WHT/BLK	26	3.8"	
P23001-1							
-2							
-3							
-4							
-5		N/C					
-6		KEY					
-7		N/C					
J15003-1							
-2							
-3		N/C					
-4							
-5		N/C					
ITEM 24-1		E15003 (DS1)		BLK	26	5.5"	
ITEM 24-2		E15002 (DS1)		WHT/BLK	26	5.5"	
S15001-1		S15001-3		RED	26	.5"	
ITEM 26-1	SQ1	S15001-A(RIGHT)		BLK	24	8.0"	
-2	SQ1	S15001-A(LEFT)		WHT	24	8.0"	
-3	SQ1	N/C		BLK	26		
-4	SQ1	S15001-C(LEFT)		GRN	24	8.0"	
-5	SQ1	S15001-C(RIGHT)		RED	24	8.0"	
ITEM 25-1		S15001-2		BLK	26	6.5"	
-2		S15001-3		RED	26	6.5"	

SEE ITEM 22 FOR CONNECTIONS

SEE ITEM 22 FOR CONNECTIONS

G H J K L

DATE	REV	CHANGE	APVD
		SEE SHT 1	

NOTES:

1. ALL REFERENCE DESIGNATORS CARRY AN ASSIGNED DESIGNATOR SERIES, THIS ASS'Y CARRIES SERIES 15000 (i.e., R1 IS R15001).

2 > DS2 MOUNTS ON BOTTOM SIDE OF PCB, CUT .45 INCH 22 GA. SLEEVING (ITEM 13) FOR EACH LEAD FOR PROPER SPACING SHORT LEAD GOES TO SQUARE PAD.

3 > FREE STOCK HARDWARE (PART OF 4750-7616-100).

4. REFERENCE SCHEMATIC: 0000-8841-000

5. TRIANGLE INDICATES CONTINUATION OF CABLE.

DRAWN SIGLER 4-17-90	ER SYSTEMS INC
CHECKED	TITLE MECH ASS'Y FRONT PANEL, S-1403C
APPROVED	SIZE D · DWG NO 7305-8841-000 · REV A
	SCALE 1:1 · WEIGHT 11190 · SHEET 2 OF 2

ASSY NO.	REVISION	DESCRIPTION	LAST ECN	DATE INC
7005-8841-000	A	MECH ASSY,FRONT PANEL		10/30/71

STAT	REF.DES.	QTY	COMP. PART NO.	DESCRIPTION	EFFECTIVE
ACT	*01	1.00	1405-6850-000	PANEL,FRONT	00/00/00
ACT	*02	1.00	1400-5355-800	BRKT,POT MTG	00/00/00
ACT	*03	1.00	2406-6850-800	BEZEL	00/00/00
ACT	*04	1.00	2403-8850-100	OVERLAY, S-1403C	00/00/00
ACT	*05	1.00	6045-6880-100	RBN CA ASSY LCD DISPLAY/FP PCB	00/00/00
ACT	*06	1.00	7010-6830-100	PC BD ASSY, KEYBOARD	00/00/00
ACT	*07	1.00	7010-6830-200	PCB ASSY,FRONT PANEL PROCESSOR	00/00/00
ACT	*08	4.00	2850-6851-700	STANDOFF,.34LG,.188 HEX,4-40ID	00/00/00
ACT	*09	2.00	2800-7600-175	SPACER,AL,.187OD,4-40ID,.75 LG	00/00/00
ACT	*10	1.00	2402-5456-500	KNOB,1.00 OD.250 ID.60 LG	00/00/00
ACT	*11	4.00	2803-0125-001	SCREW,4-40 X 1/8 SHS	00/00/00
ACT	*12	1.00	2402-0921-900	KNOB,RND, .438OD,.128ID,.520LG	00/00/00
ACT	*13	.13	6011-0027-001	TUBING,TF,22 AWG,NATURAL,TW	00/00/00
ACT	*14	12.00	2803-0250-006	SCREW,4-40 X 1/4 PPHM	00/00/00
ACT	*15	6.00	2850-0000-020	NUT,HEX,SMALL PAT,4-40	00/00/00
ACT	*16	6.00	2840-0000-003	WASHER,LOCK,INT TOOTH,4	00/00/00
ACT	*17	2.00	2800-7600-114	SPACER,AL,.500OD,.375ID,.080LG	00/00/00
ACT	*18	24.00	2402-5053-001	PUSHBUTTON	00/00/00
ACT	*19	1.00	5114-0000-000	BOOT,SWITCH	00/00/00
ACT	*20	1.20	6010-0125-100	TUBING,HS, 1/8 ID,CLEAR	00/00/00
ACT	*21	14.00	6004-6005-400	TY-RAP,4.0 LG	00/00/00
ACT	*22/P14005	1.00	6046-6880-500	CABLE ASSY,FT PNL BD S-1403	00/00/00
ACT	*23/P14004	1.00	6046-6880-400	CABLE ASSY,FT PNL/ENC SW S1403	00/00/00
ACT	*24/J15004	1.00	6046-6880-300	CABLE ASSY,DSPL/FT PNL S-1403	00/00/00
ACT	*25/J15002	1.00	6046-6880-200	CABLE ASSY,PWR SW LAMP S-1403	00/00/00
ACT	*26/P10018	1.00	6046-6880-100	CABLE ASSY, POWER SWITCH	00/00/00

ASSY NO.	REVISION	DESCRIPTION	LAST ECN	DATE INC
7005-8841-000	A	MECH ASSY,FRONT PANEL		10/30/71

STAT	REF.DES.	QTY	COMP. PART NO.	DESCRIPTION	EFFECTIVE
ACT	*27	2.00	2127-9900-100	KEY,POLARIZIN,MOLEX 15-04-9209	00/00/00
ACT	*28	1.00	2850-0000-033	NUT,HEX,SMALL PAT,3/8-32	00/00/00
ACT	*29	1.00	2840-7600-205	WASHER,ALUM,.500D,.375ID,.020T	00/00/00
ACT	DS15001	1.00	4600-6800-400	DSPL,DOT MATRIX LCD, LM SERIES	00/00/00
ACT	DS15002	1.00	4950-0201-200	OPTO LED,HLMP-3507,GREEN W/SKT	00/00/00
ACT	J10001	1.00	2200-0410-100	CONN,ADAPT,F BNC/F SMASTR BHD*	00/00/00
ACT	J10002	1.00	2200-6950-100	CONN,F N/SMA F,STR BULKHEAD	00/00/00
ACT	R15001	1.00	4750-7616-100	POT, 1K OHM, RV6NAYSD102A .78	00/00/00
ACT	RE15001	1.00	4795-0000-002	ENCODER,ROTARY CONTACT 25-PIR*	00/00/00
ACT	S15001	1.00	5115-0000-007	SWITCHPUSHBUTTON90EAIC4F3J1RN2	00/00/00

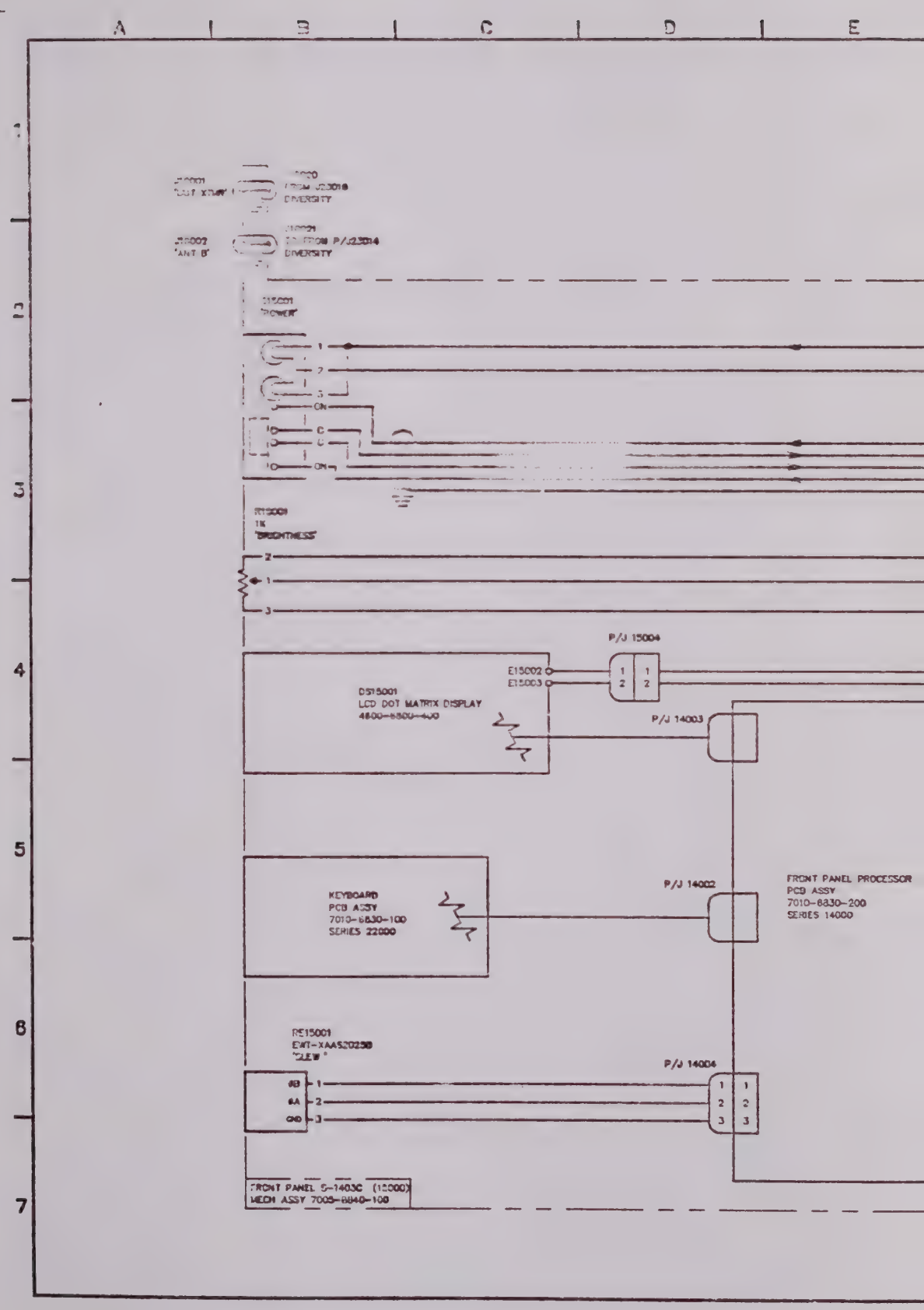

A
B
C
D
E
1
2
3
4
5
6
7
DIVERSITY
DIVERSITY
'POWER'
ON
ON
1K
'BRIGHTNESS'
P/J 15004
E15002
E15003
DS15001
LCD DOT MATRIX DISPLAY
P/J 14003
KEYBOARD
PCB ASSY
7010-6830-100
SERIES 22000
P/J 14002
FRONT PANEL PROCESSOR
PCB ASSY
7010-6830-200
SERIES 14000
RE15001
'SLEW'
P/J 14004
FRONT PANEL S-1403C (12000)
MECH ASSY 7005-6840-100

F G H J K L

DATE	REV	CHANGE	ECO
4/16/90	A	COPY OVER FROM S-1403	DAH

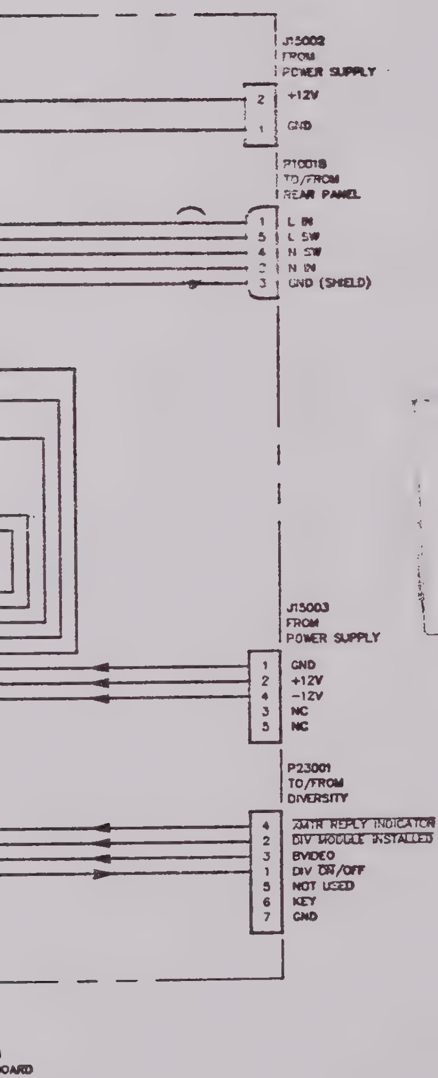

STANDARDS:
(UNLESS OTHERWISE NOTED)
1. ALL REFERENCE NUMBERS CARRY AN ASSIGNED DESIGNATOR SERIES.
THIS SCHEMATIC CARRIES SERIES: 15000

NOTES:
(UNLESS OTHERWISE NOTED)
1. LAST REFERENCE NUMBERS USED.
DS1, J4, RE1, S1, R1

2. REFERENCE NUMBERS NOT USED.

COPY

IFR SYSTEMS INC

DRAWN D.HAYNES 4/16/90	TITLE INTERCONNECT FRONT PANEL S-1403C
CHECKED	
APPROVED	SIZE D — DWG NO. C000-8841-000 — REV A
	SCALE — DO NOT SCALE — FROM C1190 — SHEET 1 of 1

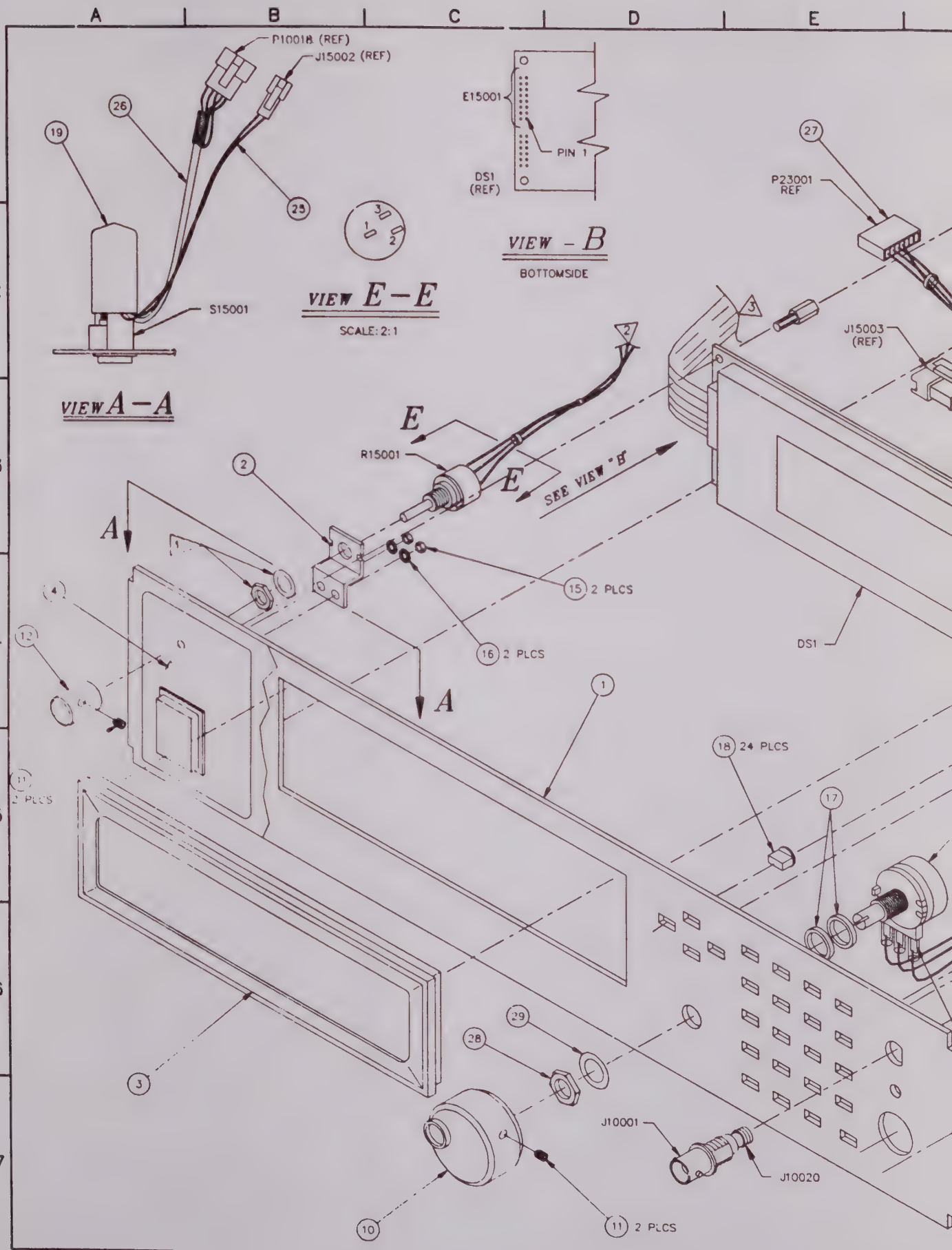
A
B
C
D
E
1
2
3
4
5
6
7
P10018 (REF)
J15002 (REF)
19
26
25
S15001
VIEW A–A
E15001
PIN 1
DS1 (REF)
VIEW – B
BOTTOMSIDE
VIEW E–E
SCALE: 2:1
27
P23001 REF
J15003 (REF)
E
R15001
SEE VIEW "B"
2
15 2 PLCS
16 2 PLCS
DS1
12
11 2 PLCS
18 24 PLCS
17
29
28
J10001
J10020
10
11 2 PLCS

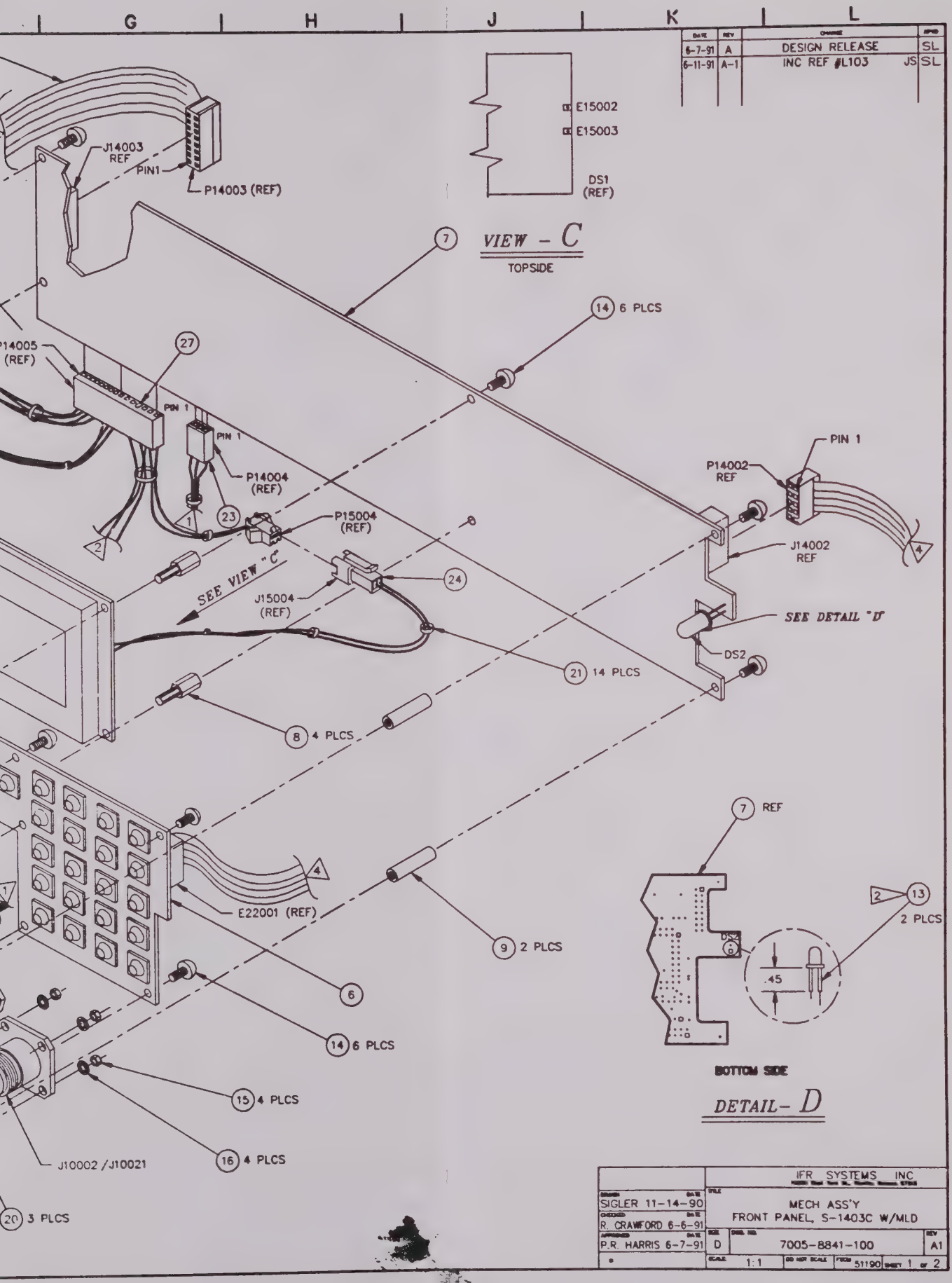
G
H
J
K
L
DATE | REV | CHANGE | APVD
6-7-91 | A | DESIGN RELEASE | SL
6-11-91 | A-1 | INC REF #L103 | JS SL
E15002
E15003
DS1 (REF)
J14003 REF
PIN1
P14003 (REF)
7
VIEW - C
TOPSIDE
14 6 PLCS
P14005 (REF)
27
PIN 1
PIN 1
P14004 (REF)
23
P15004 (REF)
SEE VIEW "C"
J15004 (REF)
24
21 14 PLCS
8 4 PLCS
PIN 1
P14002 REF
J14002 REF
SEE DETAIL "D"
DS2
E22001 (REF)
9 2 PLCS
6
14 6 PLCS
15 4 PLCS
16 4 PLCS
J10002 /J10021
20 3 PLCS
7 REF
2
13
2 PLCS
DS2
.45
BOTTOM SIDE
DETAIL- D
IFR SYSTEMS INC
SIGLER 11-14-90
R. CRAWFORD 6-6-91
P.R. HARRIS 6-7-91
MECH ASS'Y
FRONT PANEL, S-1403C W/MLD
SIZE D
7005-8841-100
REV A1
SCALE 1:1
DO NOT SCALE
FSCM 51190
SHEET 1 of 2

WIRE RUNNING LIST

TERMINAL	NOTES	TERMINAL	NOTES	COLOR	AWG	LENGTH	NOTES
ITEM 23-1		RE15001-1		WHT/BRN	26	8"	
-2		-2		WHT/RED			
-3		-3		BLK			
ITEM 22-1		P23001-1		WHT/BLU	26	7"	
-2		-2		WHT/BLK	26	7"	
-3		-3		WHT/VIO	26	7"	
-4		KEY					
-5		P23001-4		WHT/GRN	26	7"	
-6		P23001-5		WHT/ORN	26	7"	
-7		J15003-4		YEL	22	3.5"	
-8		N/C					
-9		J15003-2		RED	22	3.5"	
-10		J15003-1		BLK	22	3.5"	
-11		R15001-2		WHT/RED	26	6"	
-12		R15001-1		WHT	26	6"	
-13		R15001-3		BLK	26	6"	
-14		P15004-1		BLK	26	3.8"	
-15		P15004-2		WHT/BLK	26	3.8"	
P23001-1							
-2							
-3							
-4							
-5							
-6		KEY					
-7		N/C					
J15003-1							
-2							
-3		N/C					
-4							
-5		N/C					
ITEM 24-1		E15003 (DS1)		BLK	26	5.5"	
ITEM 24-2		E15002 (DS1)		WHT/BLK	26	5.5"	
S15001-1		S15001-3		RED	26	.5"	
ITEM 26-1	SQ1	S15001-NO(RIGHT)		BLK	24	8.0"	
-2	SQ1	S15001-NO(LEFT)		WHT	24	8.0"	
-3	SQ1 SHELL	N/C		BLK	26		
-4	SQ1	S15001-C(LEFT)		GRN	24	8.0"	
-5	SQ1	S15001-C(RIGHT)		RED	24	8.0"	
ITEM 25-1		S15001-2		BLK	26	6.5"	
-2		S15001-3		RED	26	6.5"	

SEE ITEM 22 FOR CONNECTIONS

SEE ITEM 22 FOR CONNECTIONS

DATE	REV	CHANGE	APVD
		SEE SHT 1	

NOTES:

1. ALL REFERENCE DESIGNATORS CARRY AN ASSIGNED DESIGNATOR SERIES, THIS ASS'Y CARRIES SERIES 15000 (i.e., R1 IS R15001).
2. DS2 MOUNTS ON BOTTOM SIDE OF PCB, CUT .45 INCH 22 GA. SLEEVING (ITEM 13) FOR EACH LEAD FOR PROPER SPACING SHORT LEAD GOES TO SQUARE PAD.
3. FREE STOCK HARDWARE (PART OF 4750-7616-100).
4. REFERENCE SCHEMATIC: 0000-8841-100
5. TRIANGLE INDICATES CONTINUATION OF CABLE.

	IFR SYSTEMS INC
DRAWN SIGLER 11-14-90	TITLE MECH ASS'Y FRONT PANEL, S-1403C W/MLD
CHECKED R CRAWFORD 6-6-91	
APPROVED P.R HARRIS 6-7-91	SIZE D / DWG NO 7005-8841-100 / REV A1
	SCALE 1:1 / DO NOT SCALE / PRINT 5?1190 / SHEET 2 of 2

ASSY NO.	REVISION	DESCRIPTION	LAST ECN	DATE INC
7005-8841-100	A1	MECH ASSY,FRONT PANEL W/MLD	#L103	06/11/91

STAT	REF.DES.	QTY	COMP. PART NO.	DESCRIPTION	EFFECTIVE
ACT	*01	1.00	1405-6850-000	PANEL,FRONT	00/00/00
ACT	*02	1.00	1400-5355-800	BRKT,POT MTG	00/00/00
ACT	*03	1.00	2406-6850-800	BEZEL	00/00/00
ACT	*04	1.00	2403-8850-100	OVERLAY, S-1403C	00/00/00
ACT	*05	1.00	6045-6880-100	RBN CA ASSY LCD DISPLAY/FP PCB	00/00/00
ACT	*06	1.00	7010-6830-100	PC BD ASSY, KEYBOARD	00/00/00
ACT	*07	1.00	7010-8830-100	PCB ASSY,FT.PNL.PROC. W/MLD	00/00/00
ACT	*08	4.00	2850-6851-700	STANDOFF,.34LG,.188 HEX,4-40ID	00/00/00
ACT	*09	2.00	2800-7600-175	SPACER,AL,.187OD,4-40ID,.75 LG	00/00/00
ACT	*10	1.00	2402-5456-500	KNOB,1.00 OD.250 ID.60 LG	00/00/00
ACT	*11	4.00	2803-0125-001	SCREW,4-40 X 1/8 SHS	00/00/00
ACT	*12	1.00	2402-0921-900	KNOB,RND, .438OD,.128ID,.520LG	00/00/00
ACT	*13	.13	6011-0027-001	TUBING,TF,22 AWG,NATURAL,TW	00/00/00
ACT	*14	12.00	2803-0250-006	SCREW,4-40 X 1/4 PPHM	00/00/00
ACT	*15	6.00	2850-0000-020	NUT,HEX,SMALL PAT,4-40	00/00/00
ACT	*16	6.00	2840-0000-003	WASHER,LOCK,INT TOOTH,4	00/00/00
ACT	*17	2.00	2800-7600-114	SPACER,AL,.5000D,.375ID,.080LG	00/00/00
ACT	*18	24.00	2402-5053-001	PUSHBUTTON	00/00/00
ACT	*19	1.00	5114-0000-000	BOOT,SWITCH	00/00/00
ACT	*20	1.20	6010-0125-100	TUBING,HS, 1/8 ID,CLEAR	00/00/00
ACT	*21	14.00	6004-6005-400	TY-RAP,4.0 LG	00/00/00
ACT	*22/P14005	1.00	6046-8880-300	CABLE ASSY,FT PNL BD S-1403C	00/00/00
ACT	*23/P14004	1.00	6046-6880-400	CABLE ASSY,FT PNL/ENC SW S1403	00/00/00
ACT	*24/J15004	1.00	6046-6880-300	CABLE ASSY,DSPL/FT PNL S-1403	00/00/00
ACT	*25/J15002	1.00	6046-6880-200	CABLE ASSY,PWR SW LAMP S-1403	00/00/00
ACT	*26/P10018	1.00	6046-6880-100	CABLE ASSY, POWER SWITCH	00/00/00

ASSY NO.	REVISION	DESCRIPTION	LAST ECN	DATE INC
7005-8841-100	A1	MECH ASSY,FRONT PANEL W/MLD	#L103	06/11/91

STAT	REF.DES.	QTY	COMP. PART NO.	DESCRIPTION	EFFEC
ACT	*27	2.00	2127-9900-100	KEY,POLARIZIN,MOLEX 15-04-9209	00/00/
ACT	*28	1.00	2850-0000-033	NUT,HEX,SMALL PAT,3/8-32	00/00/00
ACT	*29	1.00	2840-7600-205	WASHER,ALUM,.500D,.375ID,.020T	00/00/00
ACT	DS15001	1.00	4600-6800-400	DSPL,DOT MATRIX LCD, LM SERIES	00/00/00
ACT	DS15002	1.00	4950-0201-200	OPTO LED,HLMP-3507,GREEN W/SKT	00/00/00
ACT	J10001	1.00	2200-0410-100	CONN,ADAPT,F BNC/F SMASTR BHD*	00/00/00
ACT	J10002	1.00	2200-6950-100	CONN,F N/SMA F,STR BULKHEAD	00/00/00
ACT	R15001	1.00	4750-7616-100	POT, 1K OHM, RV6NAYSD102A .78	00/00/00
ACT	RE15001	1.00	4795-0000-002	ENCODER,ROTARY CONTACT 25-PIR*	00/00/00
ACT	S15001	1.00	5115-0000-007	SWITCHPUSHBUTTON90EAIC4F3J1RN2	00/00/00

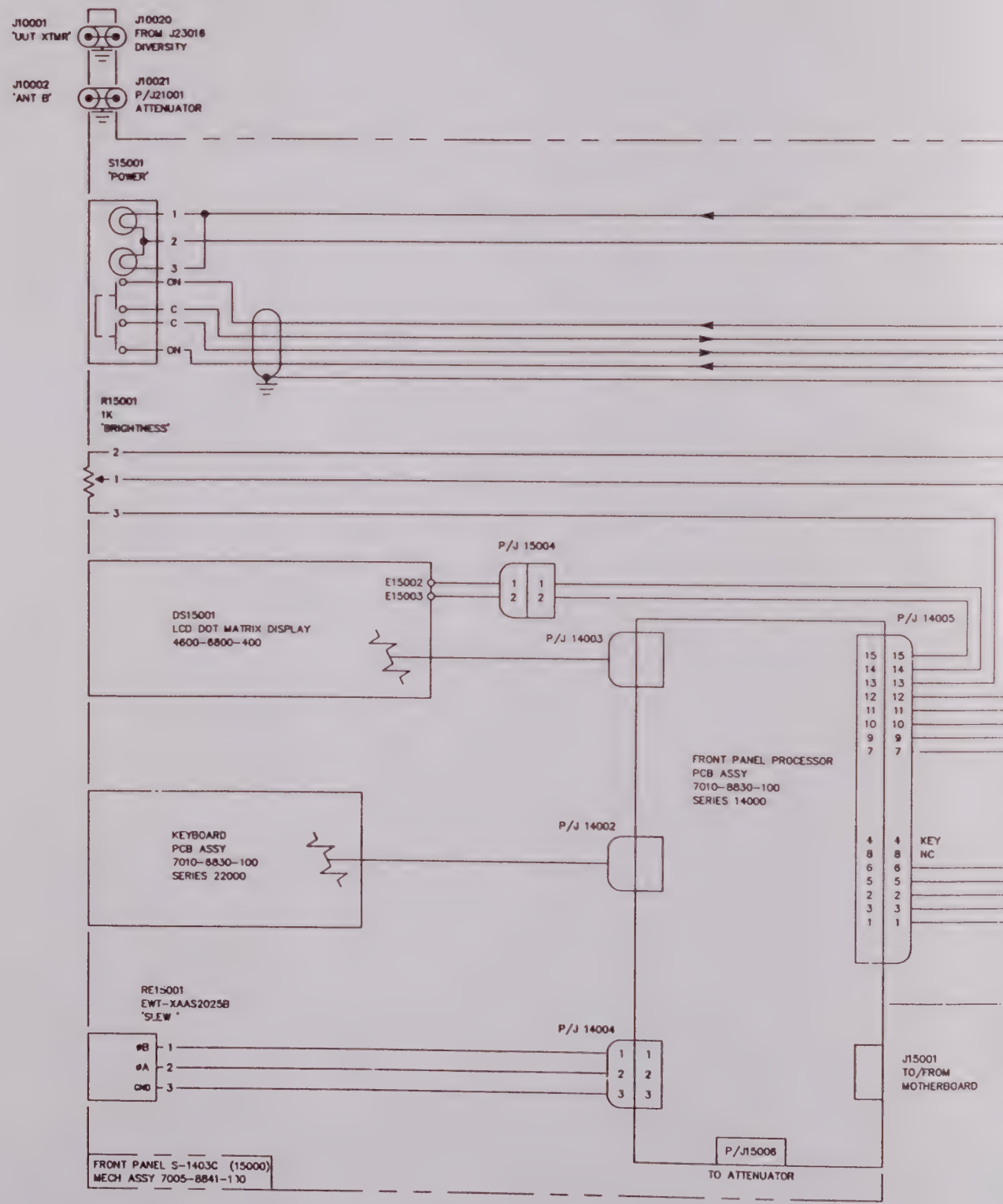
J10001
'UUT XTMR'
J10020
FROM J23016
DIVERSITY
J10002
'ANT B'
J10021
P/J21001
ATTENUATOR
S15001
'POWER'
1
2
3
ON
C
C
ON
R15001
1K
'BRIGHTNESS'
2
1
3
P/J 15004
E15002
E15003
1
2
1
2
DS15001
LCD DOT MATRIX DISPLAY
4600-6800-400
P/J 14003
P/J 14005
15 15
14 14
13 13
12 12
11 11
10 10
9 9
7 7
FRONT PANEL PROCESSOR
PCB ASSY
7010-8830-100
SERIES 14000
KEYBOARD
PCB ASSY
7010-8830-100
SERIES 22000
P/J 14002
4 4 KEY
8 8 NC
6 6
5 5
2 2
3 3
1 1
RE15001
EWT-XAAS2025B
'SLEW'
P/J 14004
ØB 1
ØA 2
GND 3
1 1
2 2
3 3
J15001
TO/FROM
MOTHERBOARD
P/J15006
TO ATTENUATOR
FRONT PANEL S-1403C (15000)
MECH ASSY 7005-8841-110

G H J K L

DATE	REV	CHANGE	APVD
6-26-91	A	DESIGN RELEASE RGC	SL

J15002
FROM
POWER SUPPLY

2	+12V
1	GND

P10018
TO/FROM
REAR PANEL

1	L IN
5	L SW
4	N SW
2	N IN
3	GND (SHIELD)

J15003
FROM
POWER SUPPLY

1	GND
2	+12V
4	-12V
3	NC
5	NC

P23001
TO/FROM
DIVERSITY

5	EXT AM MOD
4	XMTR REPLY INDICATOR
2	NC
3	BVIDEO
1	DIV ON/OFF
6	KEY
7	GND

DRAWN D.HAYNES 4-16-90	IFR SYSTEMS INC 10800 West York St., Wichita, Kansas 67215	
CHECKED R.CRAWFORD 6-24-91	TITLE INTERCONNECT FRONT PANEL, S-1403C, W/MLD	
APPROVED P.R.HARRIS 6-24-91	SIZE D	DWG. NO. 0000-8841-100 REV A
	SCALE DO NOT SCALE	FSCM 51190 SHEET 1 OF 1

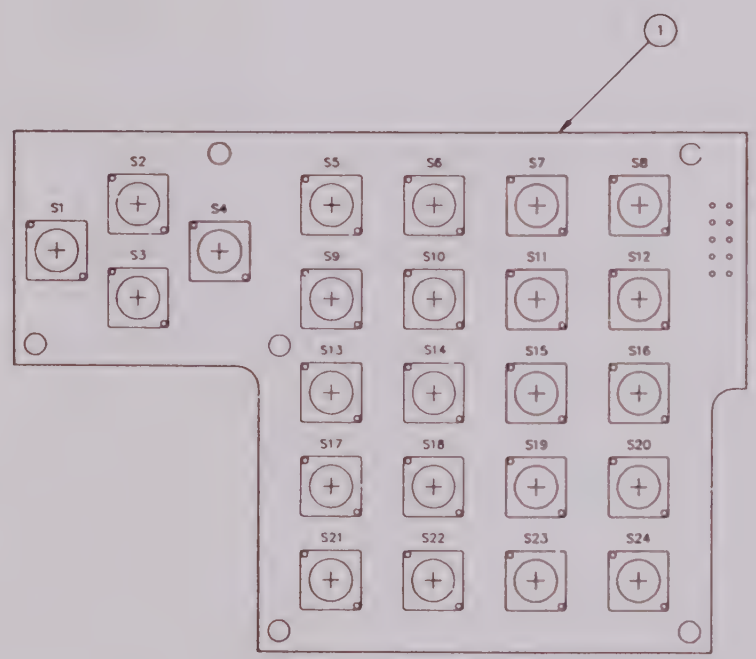
1
S1
S2
S3
S4
S5
S6
S7
S8
S9
S10
S11
S12
S13
S14
S15
S16
S17
S18
S19
S20
S21
S22
S23
S24

TOP SIDE

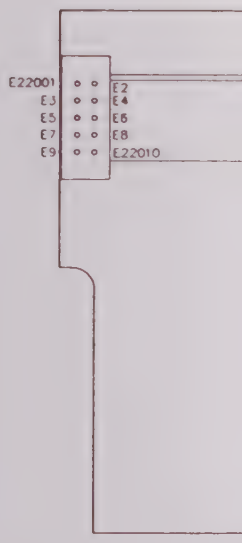
E22001
E3
E5
E7
E9
E2
E4
E6
E8
E22010

B

G | H | J | K | L

DATE	REV	CHANGE	APVD
3/18/88	C	DESIGN RELEASE	CJKM
7/28/88	C	PROD REL PER ECN 11475 JR	SLR
8/10/90	C-1	INC RC 13580 AO	BP
7/15/91	C-2	INC ECN 14227 BP	BP

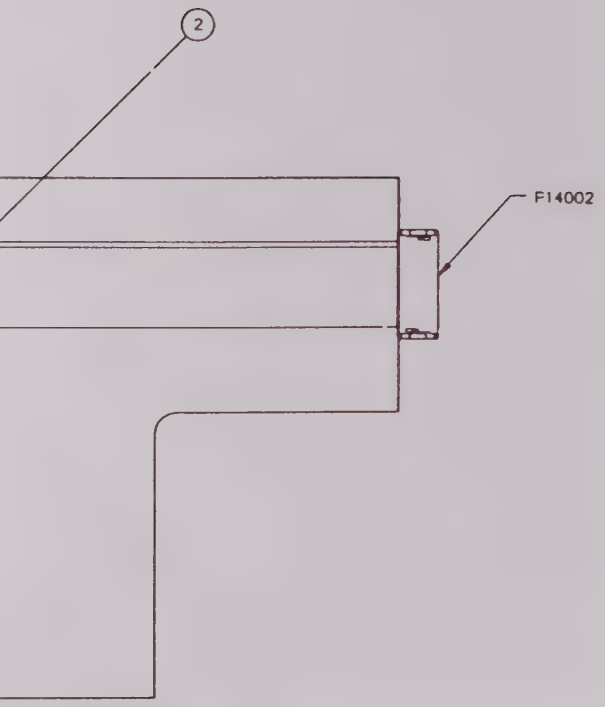

NOTES:

1. ALL REF NO'S CARRY AN ASSIGNED DESIGNATOR SERIES. THIS DRAWING CARRIES SERIES 22000 (i.e R1 IS R22001).
2. PADS AND FEED THRU'S ARE REPRESENTED BY "X" "□" INDICATES PIN 1 OR POLARITY.
3. REFERENCE SCHEMATIC 0000-6830-100

	IFR SYSTEMS INC. 10800 West York St. Wichita, Kansas 67215	
DRAWN BURNETT DATE 3/18/88	TITLE PC BD ASS'Y KEYBOARD	
CHECKED R.CRAWFORD DATE 4/4/88		
APPROVED P.R.HARRIS DATE 4/5/88	SIZE D	DWG. NO. 7010-6830-100 REV C2
	SCALE 2:1	DO NOT SCALE FSCM 51190 SHEET 1 of 1

PRINT DATE 03/01/91 BILL OF MATERIAL LISTED BY REF. DESIG. PAGE 1 S1

ASSY NO.	REVISION	DESCRIPTION	LAST ECN	DATE INC
7010-6830-100	C1	PC BD ASSY, KEYBOARD	13580	08/01/90

STAT	REF.DES.	QTY	COMP. PART NO.	DESCRIPTION	EFFECTIVE
ACT	*01	1.00	1700-6820-100	PC BD, KEYBOARD	00/00/00
ACT	*02	1.00	6045-6880-000	RBN CA ASSY,KEYBD/F.P. PC BD	00/00/00
ACT	S22001	24.00	5136-0001-000	SWITCH,COND POLYMER MEMB KEYBD	00/00/00
ACT	S22002	-.--	5136-0001-000	SWITCH,COND POLYMER MEMB KEYBD	00/00/00
ACT	S22003	-.--	5136-0001-000	SWITCH,COND POLYMER MEMB KEYBD	00/00/00
ACT	S22004	-.--	5136-0001-000	SWITCH,COND POLYMER MEMB KEYBD	00/00/00
ACT	S22005	-.--	5136-0001-000	SWITCH,COND POLYMER MEMB KEYBD	00/00/00
ACT	S22006	-.--	5136-0001-000	SWITCH,COND POLYMER MEMB KEYBD	00/00/00
ACT	S22007	-.--	5136-0001-000	SWITCH,COND POLYMER MEMB KEYBD	00/00/00
ACT	S22008	-.--	5136-0001-000	SWITCH,COND POLYMER MEMB KEYBD	00/00/00
ACT	S22009	-.--	5136-0001-000	SWITCH,COND POLYMER MEMB KEYBD	00/00/00
ACT	S22010	-.--	5136-0001-000	SWITCH,COND POLYMER MEMB KEYBD	00/00/00
ACT	S22011	-.--	5136-0001-000	SWITCH,COND POLYMER MEMB KEYBD	00/00/00
ACT	S22012	-.--	5136-0001-000	SWITCH,COND POLYMER MEMB KEYBD	00/00/00
ACT	S22013	-.--	5136-0001-000	SWITCH,COND POLYMER MEMB KEYBD	00/00/00
ACT	S22014	-.--	5136-0001-000	SWITCH,COND POLYMER MEMB KEYBD	00/00/00
ACT	S22015	-.--	5136-0001-000	SWITCH,COND POLYMER MEMB KEYBD	00/00/00
ACT	S22016	-.--	5136-0001-000	SWITCH,COND POLYMER MEMB KEYBD	00/00/00
ACT	S22017	-.--	5136-0001-000	SWITCH,COND POLYMER MEMB KEYBD	00/00/00
ACT	S22018	-.--	5136-0001-000	SWITCH,COND POLYMER MEMB KEYBD	00/00/00
ACT	S22019	-.--	5136-0001-000	SWITCH,COND POLYMER MEMB KEYBD	00/00/00
ACT	S22020	-.--	5136-0001-000	SWITCH,COND POLYMER MEMB KEYBD	00/00/00
ACT	S22021	-.--	5136-0001-000	SWITCH,COND POLYMER MEMB KEYBD	00/00/00
ACT	S22022	-.--	5136-0001-000	SWITCH,COND POLYMER MEMB KEYBD	00/00/00
ACT	S22023	-.--	5136-0001-000	SWITCH,COND POLYMER MEMB KEYBD	00/00/00
ACT	S22024	-.--	5136-0001-000	SWITCH,COND POLYMER MEMB KEYBD	00/00/00

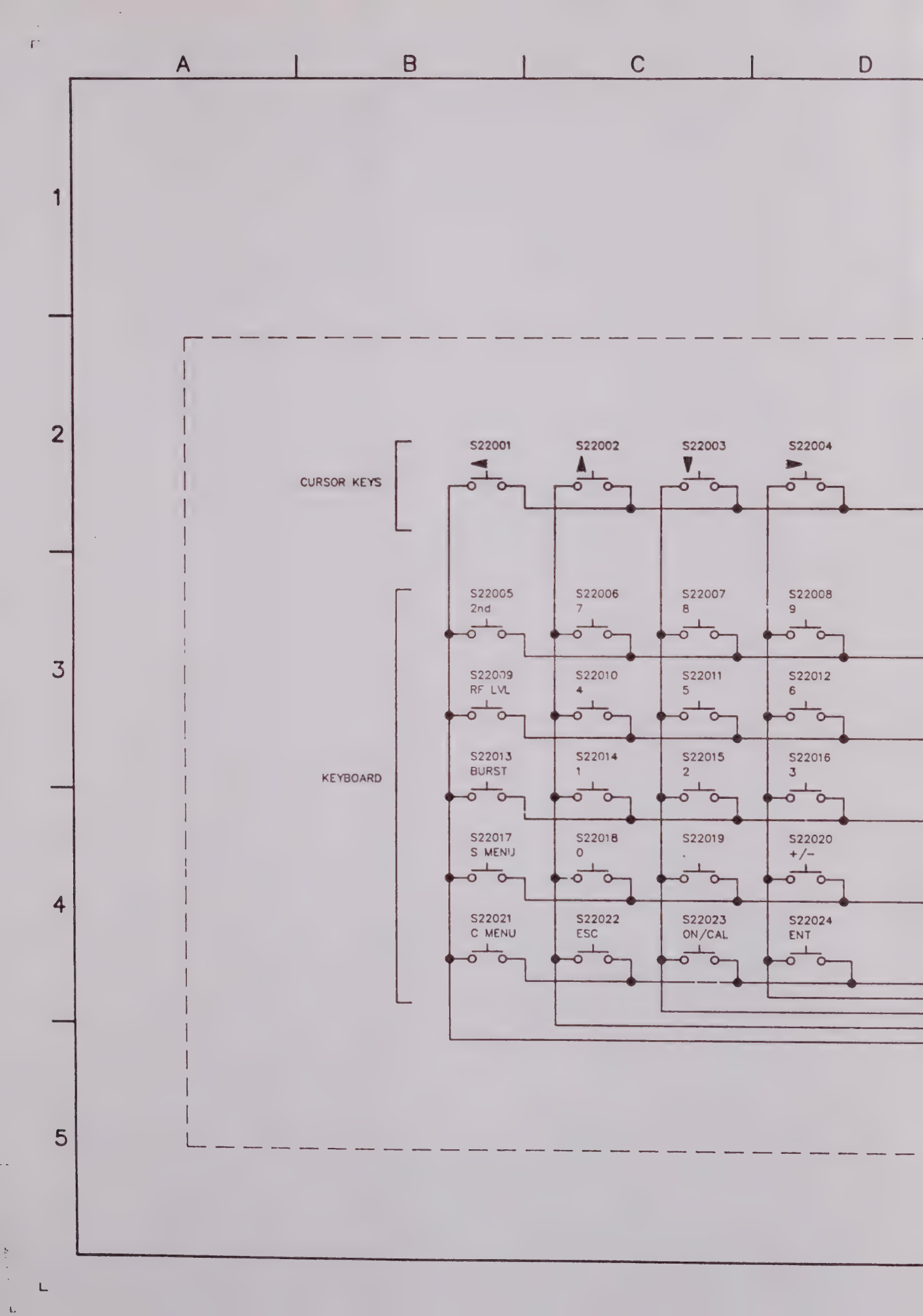
A
B
C
D
1
2
3
4
5
CURSOR KEYS
KEYBOARD
S22001
S22002
S22003
S22004
S22005
2nd
S22006
7
S22007
8
S22008
9
S22009
RF LVL
S22010
4
S22011
5
S22012
6
S22013
BURST
S22014
1
S22015
2
S22016
3
S22017
S MENU
S22018
0
S22019
.
S22020
+/-
S22021
C MENU
S22022
ESC
S22023
ON/CAL
S22024
ENT

E F G

DATE	REV	CHANGE	APVD
8/15/90		FOR PREVIOS HISTORY SEE SHEET ONE OF 7010-6830-100.	
8/15/90	C1	INCORPORATED ECN #13580	RGC

STANDARDS:
(UNLESS OTHERWISE NOTED)
1. ALL REFERENCE NUMBERS CARRY AN ASSIGNED DESIGNATOR SERIES.
THIS SCHEMATIC CARRIES SERIES: 22000

NOTES:
(UNLESS OTHERWISE NOTED)
1. LAST REFERENCE NUMBERS USED.
S22024 E22010

2. REFERENCE NUMBERS NOT USED.

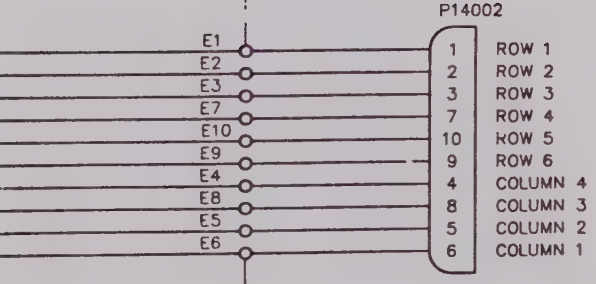

BOARD (22000)
D 1700-6820-100
D ASSY 7010-6830-1C0

IFR SYSTEMS INC
10200 West York St., Wichita, Kansas 67215

DRAWN D.HAYNES	DATE 3-3-88	TITLE: CIRCUIT SCHEMATIC KEYBOARD
CHECKED J.RYMER	DATE 3-3-88	
APPROVED P.HARRIS	DATE 3-3-88	SIZE C; DWG NO. 0000-6830-100; REV C1
		SCALE: DO NOT SCALE; FSCM 51190; SHEET 1 OF 1

DESIGN RE
ANY & ALL CHANGE
DOCUMENTATI
THROUGH

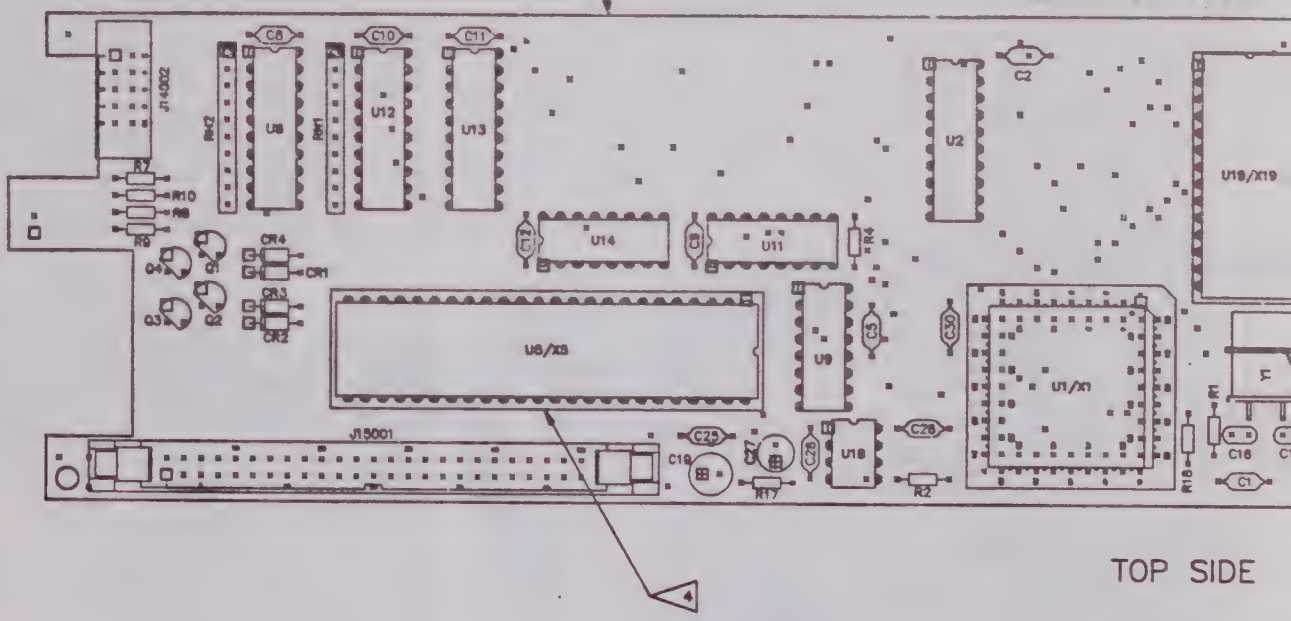

TOP SIDE

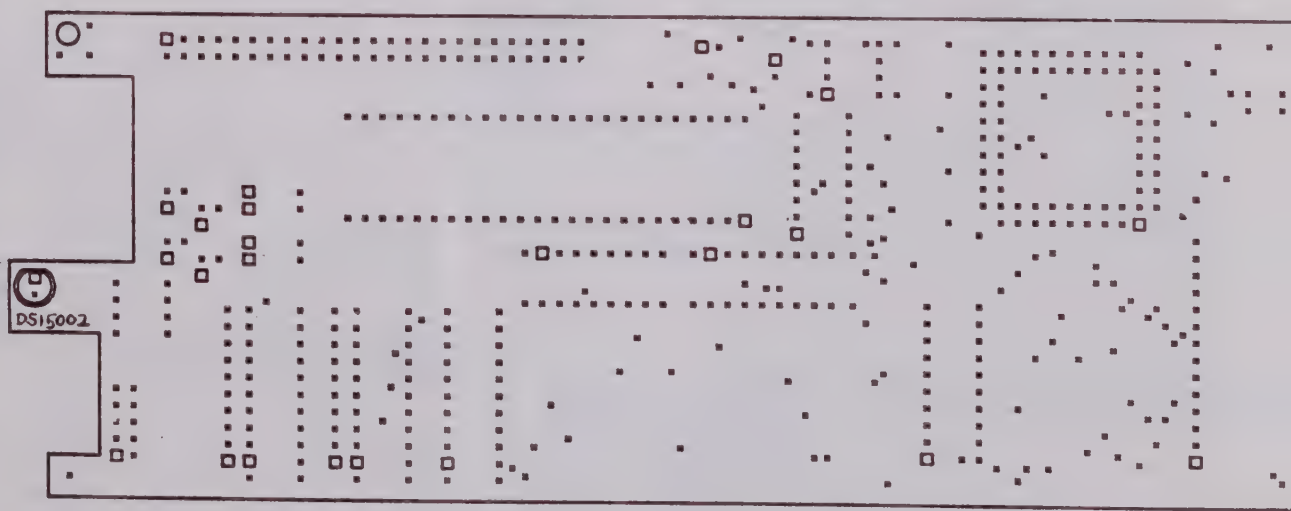

BOTTOM SIDE

SE

G | H | J | K | L

THIS
ORDINATED
GIN. ERING

DATE	REV	CHANGE	APVD
3-9-88	C	DESIGN RELEASE REF Nº 632	CJKM
4-19-88	D	INC. REF. Nº 658	CJKM
4-27-88	D-1	INC. REF. Nº 670	CJKM
5-3-88	D-2	INC. REF. Nº 676	CJKM
5-4-88	D-3	INC. REF. Nº 679	CJKM
6-17-88	D-4	INC REF. Nº 708	CJKM
7-5-88	D-5	INC REF. Nº 711	CJKM
7-28-88	D-5	PROD REL PER ECN 11475 JR	SLR
3-17-89	D-6	INC ECN #12168 WB	BP
4-25-89	D-7	INC ECN #12292 SCP	BP
8-22-89	D-8	INC ECN 12752 AO	BP
2-16-90	D-9	INC ECN 13185 AO	BP
4-2-90	E	INC ECN #13299 – REV CHANGE TO "E" BECAUSE DASH NUMBER REVISIONS ARE EXHAUSTED, NO BARE BD CHANGES. JR	BP
5-17-90	F	INC. ECN #12889 SCP	BP
5-19-90	F-1	INC ECN 13582 AO	BP
8-21-90	F-2	INC ECN 13625 AO	BP
12-14-90	F-3	INC ECN 13864 JR	BP

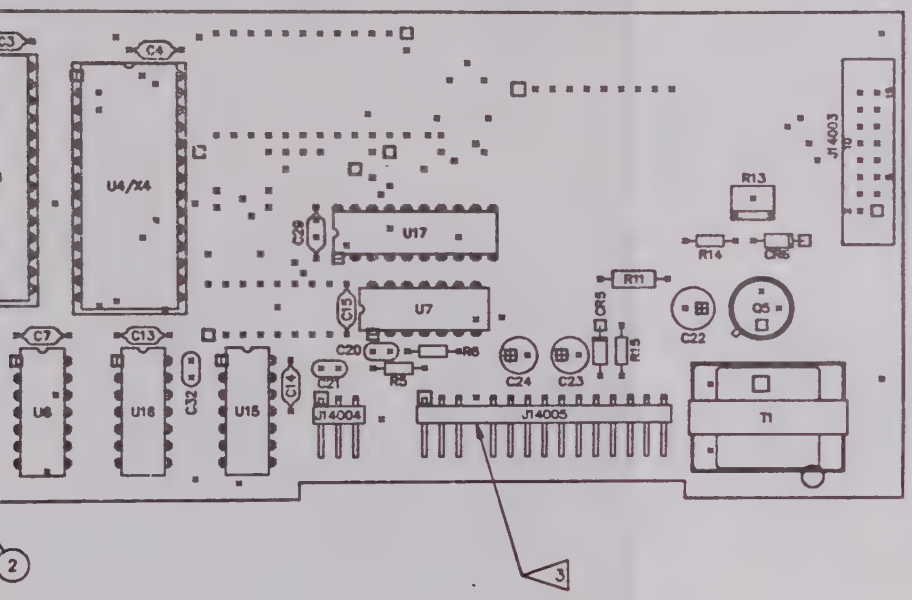

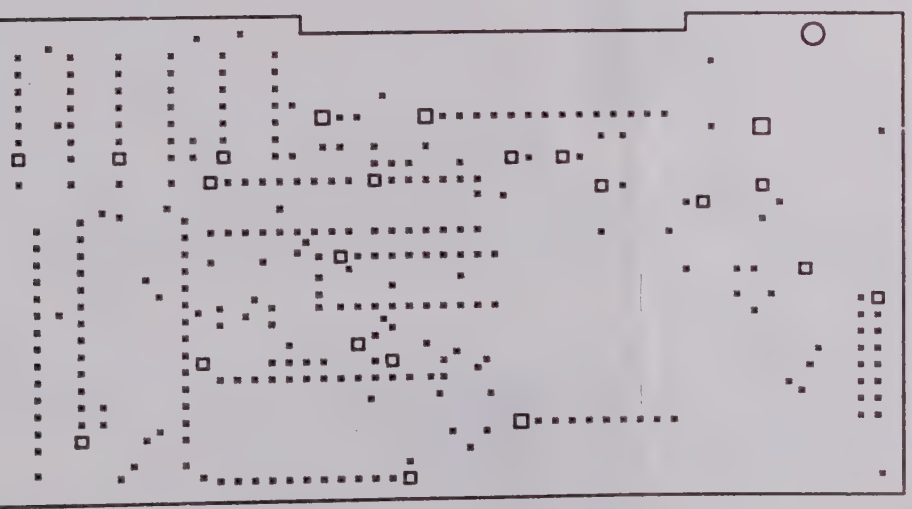

NOTES:

1. ALL REFERENCE DESIGNATORS CARRY AN ASSIGNED DESIGNATOR SERIES. THIS DRAWING CARRIES SERIES 14000 (i.e., R1 IS R14001).
2. PADS AND FEED THRU'S ARE REPRESENTED BY "X"; "□" INDICATES PIN 1 OR POLARITY.
3. REMOVE PIN 4 FOR KEYING.
4. LEADS ON X5 MUST BE CLIPPED AFTER SOLDERING (BOTTOM SIDE).
5. THIS PCB ASS'Y INCLUDES STATIC SENSITIVE DEVICES AND SHOULD BE HANDLED IN A STATIC CONTROLLED ENVIRONMENT AT ALL TIMES.
6. REF SCHEMATIC 0000-6830-200

DRAWN SIGLER 3/9/88	IFR SYSTEMS INC
CHECKED ROCK CRAWFORD 4/4/88	TITLE: PCB ASS'Y FRONT PANEL PROCESSOR
APPROVED P.R. HARRIS 4/5/88	SIZE D · DWG. NO. 7010-6830-200 · REV F3
	SCALE 2:1 · DO NOT SCALE · PROG 51190 · SHEET 1 OF 1

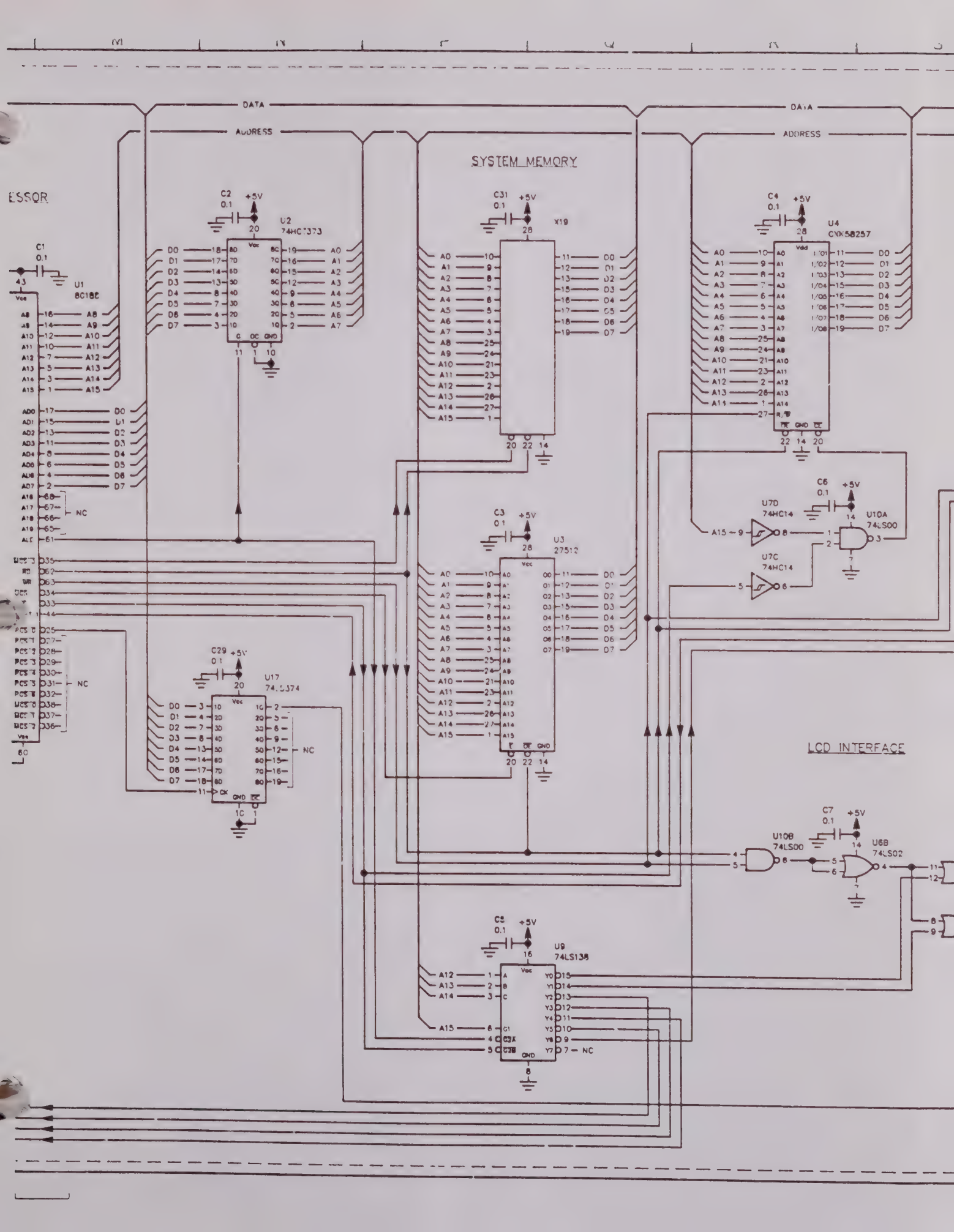
DATA
ADDRESS
SYSTEM MEMORY
ESSOR
LCD INTERFACE
U1
80188
U2
74HC373
U3
27512
U4
CXK58257
X19
U7D
74HC14
U7C
74HC14
U10A
74LS00
U10B
74LS00
U6B
74LS02
U9
74LS138
U17
74LS374
+5V
0.1
NC

DATE	REV	CHANGE	APVD
		FOR PREVIOUS HISTORY SEE SHEET ONE OF 7010-6830-200	
7/24/90	F1	INCORPORATED ECN #13582	RGC BP
8/23/90	F2	INCORPORATED ECN #13625	RGC

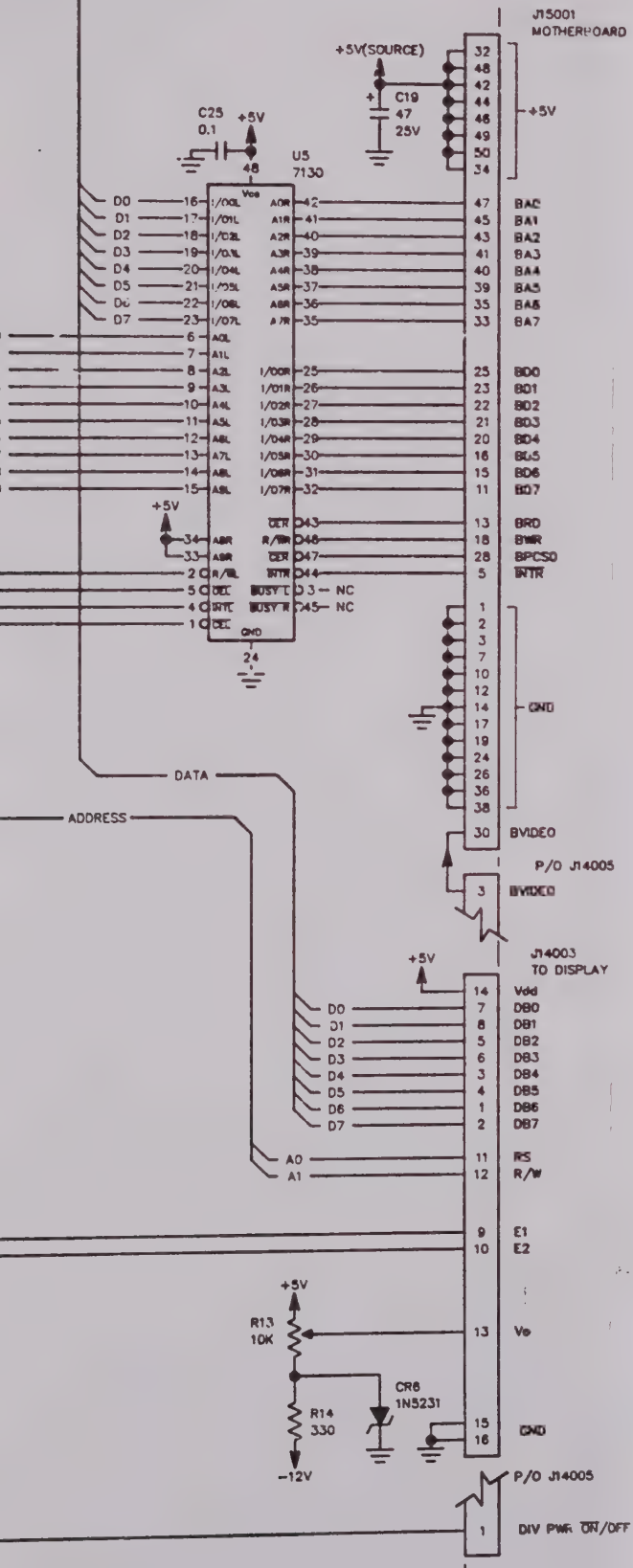

STANDARDS:
(UNLESS OTHERWISE NOTED)
1. ALL REFERENCE NUMBERS CARRY AN ASSIGNED DESIGNATOR SERIES.
THIS SCHEMATIC CARRIES SERIES: 14000
2. ALL RESISTORS ARE 1/8 W, 5 % TOLERANCE.
3. ALL RESISTANCE IS EXPRESSED IN OHMS.
4. ALL CAPACITANCE IS EXPRESSED IN MICRO FARADS.

NOTES:
(UNLESS OTHERWISE NOTED)
1. LAST REFERENCE NUMBERS USED.
CR6, J5, Q5, R18, RN2, U18, C32.

2. REFERENCE NUMBERS NOT USED.
C18, R3, R12, R16.

3. IC FUNTIONS NOT USED:

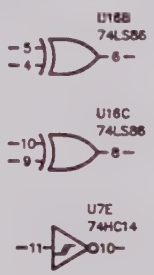

MAR 01

DRAWN D.HAYNES 6/3/88	IFR SYSTEMS INC	
CHECKED B.PUCKETT 6/24/88	TITLE CIRCUIT SCHEMATIC FRONT PANEL PROCESSOR	
APPROVED L.ZIELKE 6/24/88	SIZE EX	DWG. NO. 0000-6830-200 REV F2
	SCALE DO NOT SCALE	FSCM 51190 SHEET 1 OF 3

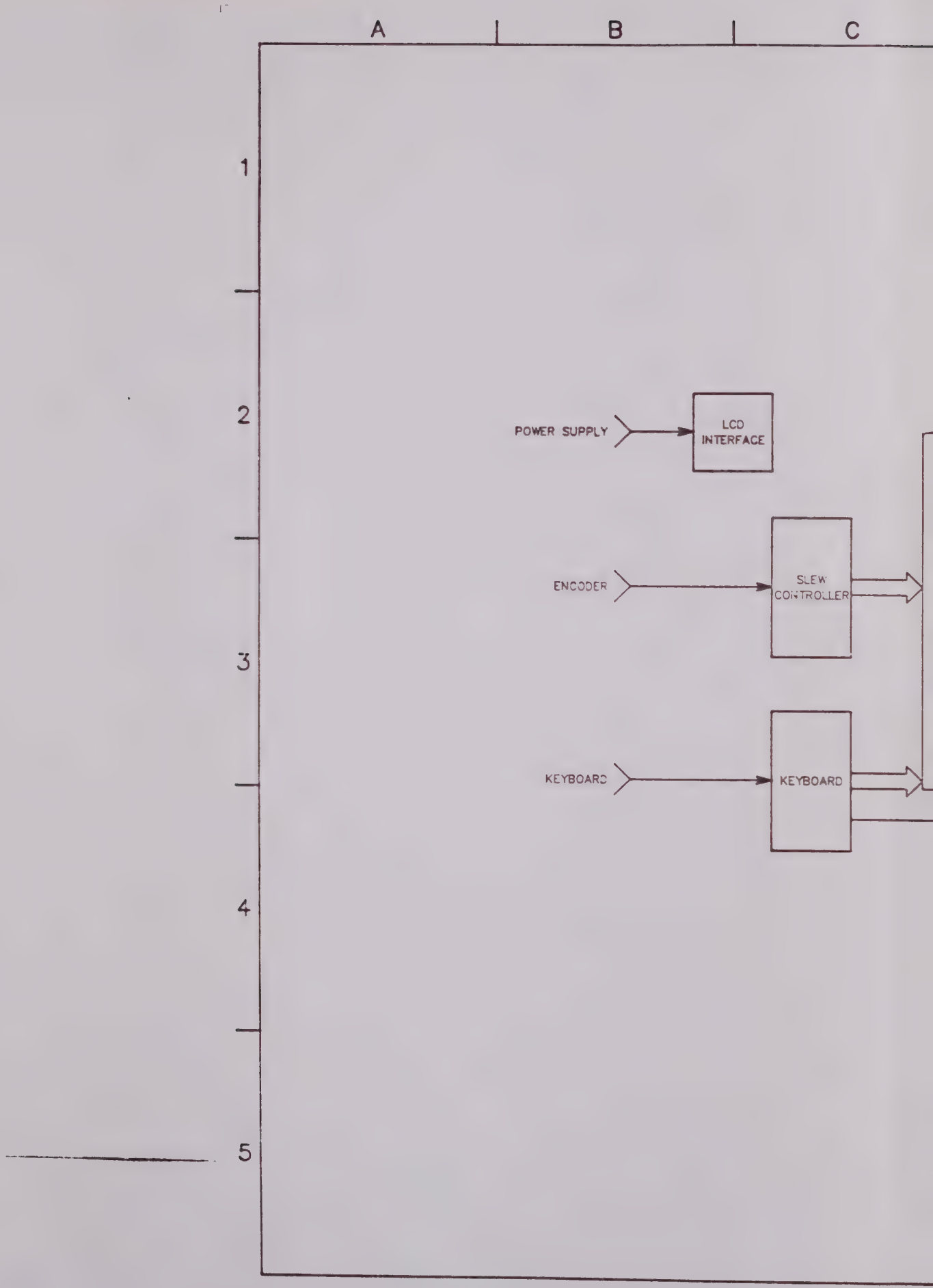
A
B
C
1
2
3
4
5
POWER SUPPLY
LCD INTERFACE
ENCODER
SLEW CONTROLLER
KEYBOARD
KEYBOARD

DESIGN RELEASE

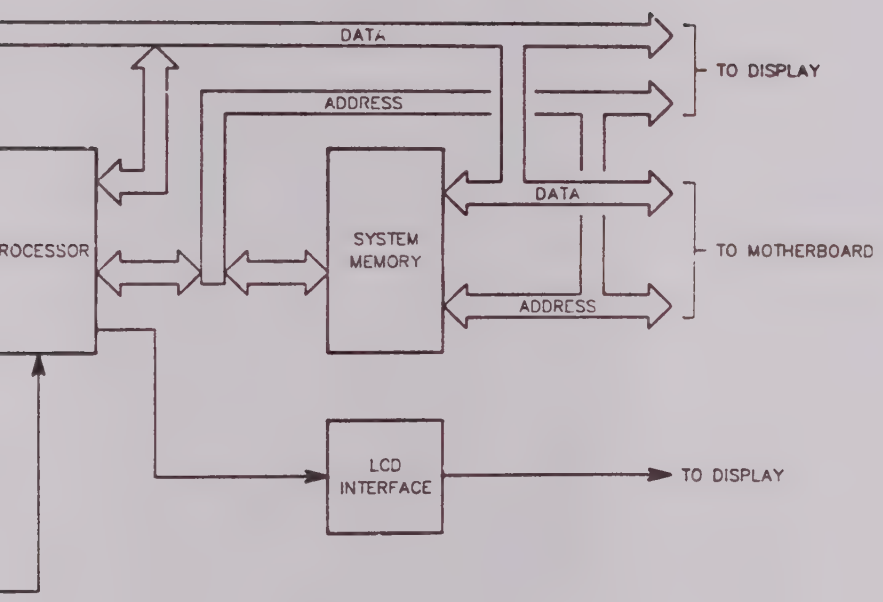

ASSY NO.	REVISION	DESCRIPTION	LAST ECN	DATE INC
7010-6830-200	F3	PCB ASSY,FRONT PANEL PROCESSOR	13864	12/12/90

STAT	REF.DES.	QTY	COMP. PART NO.	DESCRIPTION	EFFECTIVE
ACT	*01	1.00	1700-6820-200	PC BD,FRONT PANEL PROCESSSOR	00/00/00
ACT	*02	.00	1050-0000-075	WIRE,BUS,TINNED COPPER,26GA	00/00/00
ACT	*U14003	1.00	3271-6803-150	IC,27C512 FTPNL PROCESSOR V1.5	00/00/00
OBS	*U14003	1.00	3271-6803-110	IC,27512 FT PNL PROCESSOR V1.1	00/00/00
ACT	C14001	21.00	1521-0000-008	CAP,UF .10 50V,DIP Z5U *	00/00/00
ACT	C14002	-.--	1521-0000-008	CAP,UF .10 50V,DIP Z5U *	00/00/00
ACT	C14003	-.--	1521-0000-008	CAP,UF .10 50V,DIP Z5U *	00/00/00
ACT	C14004	-.--	1521-0000-008	CAP,UF .10 50V,DIP Z5U *	00/00/00
ACT	C14005	-.--	1521-0000-008	CAP,UF .10 50V,DIP Z5U *	00/00/00
ACT	C14006	-.--	1521-0000-008	CAP,UF .10 50V,DIP Z5U *	00/00/00
ACT	C14007	-.--	1521-0000-008	CAP,UF .10 50V,DIP Z5U *	00/00/00
ACT	C14008	-.--	1521-0000-008	CAP,UF .10 50V,DIP Z5U *	00/00/00
ACT	C14009	-.--	1521-0000-008	CAP,UF .10 50V,DIP Z5U *	00/00/00
ACT	C14010	-.--	1521-0000-008	CAP,UF .10 50V,DIP Z5U *	00/00/00
ACT	C14011	-.--	1521-0000-008	CAP,UF .10 50V,DIP Z5U *	00/00/00
ACT	C14012	-.--	1521-0000-008	CAP,UF .10 50V,DIP Z5U *	00/00/00
ACT	C14013	-.--	1521-0000-008	CAP,UF .10 50V,DIP Z5U *	00/00/00
ACT	C14014	-.--	1521-0000-008	CAP,UF .10 50V,DIP Z5U *	00/00/00
ACT	C14015	-.--	1521-0000-008	CAP,UF .10 50V,DIP Z5U *	00/00/00
ACT	C14016	2.00	1506-0270-017	CAP,PF 27, 100V,NPO, 5	00/00/00
ACT	C14017	-.--	1506-0270-017	CAP,PF 27, 100V,NPO, 5	00/00/00
ACT	C14018	4.00	0002-0000-000	*** REF DESIG NOT USED ***	00/00/00
ACT	C14019	1.00	1580-4700-220	CAP, uF 47, 25V,ELE, RAD *	00/00/00
ACT	C14020	2.00	1506-0103-017	CAP, uF .010, 100V, NPO *	00/00/00
ACT	C14021	-.--	1506-0103-017	CAP, uF .010, 100V, NPO *	00/00/00
ACT	C14022	1.00	1580-4702-105	CAP, UF 47, 10V, ELE RDL *	00/00/00

ASSY NO.	REVISION	DESCRIPTION	LAST ECN	DATE INC
7010-6830-200	F3	PCB ASSY,FRONT PANEL PROCESSOR	13864	12/12/90

STAT	REF.DES.	QTY	COMP. PART NO.	DESCRIPTION	EFFECTIVE
ACT	C14023	2.00	1580-1000-200	CAP,UF, 10, 25V,ELE RDL	00/00/00
ACT	C14024	-.--	1580-1000-200	CAP,UF, 10, 25V,ELE RDL	00/00/00
ACT	C14025	-.--	1521-0000-008	CAP,UF .10 50V,DIP Z5U *	00/00/00
ACT	C14026	-.--	1521-0000-008	CAP,UF .10 50V,DIP Z5U *	00/00/00
ACT	C14027	1.00	1580-1092-450	CAP, uF 1.0, 50V ELE RDL *	00/00/00
ACT	C14028	-.--	1521-0000-008	CAP,UF .10 50V,DIP Z5U *	00/00/00
ACT	C14029	-.--	1521-0000-008	CAP,UF .10 50V,DIP Z5U *	00/00/00
ACT	C14030	-.--	1521-0000-008	CAP,UF .10 50V,DIP Z5U *	00/00/00
ACT	C14031	-.--	1521-0000-008	CAP,UF .10 50V,DIP Z5U *	00/00/00
ACT	C14032	1.00	1506-0101-017	CAP,pF 100, 100V NPO 5 *	00/00/00
ACT	CR14001	4.00	4816-0000-001	DIODE,5082-2800,S BAR, 70VBR	00/00/00
ACT	CR14002	-.--	4816-0000-001	DIODE,5082-2800,S BAR, 70VBR	00/00/00
ACT	CR14003	-.--	4816-0000-001	DIODE,5082-2800,S BAR, 70VBR	00/00/00
ACT	CR14004	-.--	4816-0000-001	DIODE,5082-2800,S BAR, 70VBR	00/00/00
ACT	CR14005	1.00	4818-0000-004	DIODE, 1N5234B ,ZENER,6.2V,.5W	00/00/00
ACT	CR14006	1.00	4818-0000-003	DIODE, ZENER, 5, 1V, 5W *	00/00/00
ACT	J14002	1.00	2129-1001-010	CONN,HEADER,10-P STR 609-1027*	00/00/00
ACT	J14003	1.00	2129-1001-016	CONN,RBN CA 16-P .1X.1GRD HDR*	00/00/00
ACT	J14004	1.00	2115-1002-003	CONN,MOLEX 22-05-2031 3PIN RA	00/00/00
ACT	J14005	1.00	2115-1002-115	CONN,MOLEX 22-12-2151,GOLD PLT	00/00/00
ACT	J15001	1.00	2129-1050-050	CONN,HEADER,STR,50-P,3433-2202	00/00/00
ACT	Q14001	4.00	4807-0000-001	TRANS, 2N3903 ,NPN HS SW	00/00/00
ACT	Q14002	-.--	4807-0000-001	TRANS, 2N3903 ,NPN HS SW	00/00/00
ACT	Q14003	-.--	4807-0000-001	TRANS, 2N3903 ,NPN HS SW	00/00/00
ACT	Q14004	-.--	4807-0000-001	TRANS, 2N3903 ,NPN HS SW	00/00/00
ACT	Q14005	1.00	4801-0000-002	TRANS, 2N2405 ,NPN AMP	00/00/00

ASSY NO.	REVISION	DESCRIPTION	LAST ECN	DATE INC
7010-6830-200	F3	PCB ASSY,FRONT PANEL PROCESSOR	13864	12/12/90

STAT	REF.DES.	QTY	COMP. PART NO.	DESCRIPTION	EFFECTIVE
ACT	R14001	2.00	4701-0391-003	RES, 5, 1/8W, 390 OHM	00/00/00
ACT	R14002	2.00	4701-0102-003	RES, 5, 1/8W, 1.0K OHM	00/00/00
ACT	R14003	-.--	0002-0000-000	*** REF DESIG NOT USED ***	00/00/00
ACT	R14004	1.00	4701-0472-003	RES, 5, 1/8W, 4.7K OHM	00/00/00
ACT	R14005	2.00	4701-0223-003	RES, 5, 1/8W, 22K OHM	00/00/00
ACT	R14006	-.--	4701-0223-003	RES, 5, 1/8W, 22K OHM	00/00/00
ACT	R14007	4.00	4701-0123-003	RES, 5, 1/8W, 12K OHM	00/00/00
ACT	R14008	-.--	4701-0123-003	RES, 5, 1/8W, 12K OHM	00/00/00
ACT	R14009	-.--	4701-0123-003	RES, 5, 1/8W, 12K OHM	00/00/00
ACT	R14010	-.--	4701-0123-003	RES, 5, 1/8W, 12K OHM	00/00/00
ACT	R14011	1.00	4702-0100-003	RES, 5, 1/4W, 10 OHM *	00/00/00
ACT	R14012	-.--	0002-0000-000	*** REF DESIG NOT USED ***	00/00/00
ACT	R14013	1.00	4753-0103-002	POT, 10K OHM	00/00/00
ACT	R14014	1.00	4701-0331-003	RES, 5, 1/8W, 330 OHM	00/00/00
ACT	R14015	1.00	4701-0101-003	RES, 5, 1/8W, 100 OHM *	00/00/00
ACT	R14016	-.--	0002-0000-000	*** REF DESIG NOT USED ***	00/00/00
ACT	R14017	-.--	4701-0102-003	RES, 5, 1/8W, 1.0K OHM	00/00/00
ACT	R14018	-.--	4701-0391-003	RES, 5, 1/8W, 390 OHM	00/00/00
ACT	RN14001	2.00	4690-0912-300	RES NET,SIP,BUSS, 12K OHM,10-P	00/00/00
ACT	RN14002	-.--	4690-0912-300	RES NET,SIP,BUSS, 12K OHM,10-P	00/00/00
ACT	T14001	1.00	4600-6800-401	INVERTER SUPPLY PURCHASED	00/00/00
ACT	U14001	1.00	3135-0000-068	IC,80188,8/16-B CPU,PLCC	00/00/00
ACT	U14002	1.00	3214-8373-001	IC, OCTAL 3-STATE LATCH *	00/00/00
ACT	U14004	1.00	3260-0100-700	IC,CMOS,RAM 32X8 5857 (256)	00/00/00
ACT	U14005	1.00	3271-0005-000	IC, 7130, 1KX8 DUAL PORT RAM	00/00/00
ACT	U14006	1.00	3131-0000-032	IC,74LS02,QUAD 2-INPUT NOR	00/00/00

ASSY NO.	REVISION	DESCRIPTION	LAST ECN	DATE INC
7010-6830-200	F3	PCB ASSY,FRONT PANEL PROCESSOR	13864	12/12/90

STAT	REF.DES.	QTY	COMP. PART NO.	DESCRIPTION	EFFECTIVE
ACT	U14007	1.00	3214-9014-000	IC,74HC14,HEX INV SCHMITT TRIG	00/00/00
ACT	U14008	3.00	3214-8244-000	IC 74HCT244 OCTAL BUF/DR/RCV *	00/00/00
ACT	U14009	1.00	3131-0000-045	IC,74LS138,3-TO-8 DCDR/MPLXR	00/00/00
ACT	U14010	1.00	3131-0000-044	IC,74LS00,QUAD 2-INPUT NAND	00/00/00
ACT	U14011	2.00	3131-0000-030	IC,74LS191,BIN SYN U/D COUNTER	00/00/00
ACT	U14012	-.--	3214-8244-000	IC 74HCT244 OCTAL BUF/DR/RCV *	00/00/00
ACT	U14013	-.--	3214-8244-000	IC 74HCT244 OCTAL BUF/DR/RCV *	00/00/00
ACT	U14014	-.--	3131-0000-030	IC,74LS191,BIN SYN U/D COUNTER	00/00/00
ACT	U14015	1.00	3131-0000-038	IC,74LS74A,DUAL D FLIP-FLOP	00/00/00
ACT	U14016	1.00	3211-3086-000	IC,74LS86,QUAD 2-INPUT EXCL-OR	00/00/00
ACT	U14017	1.00	3211-3374-000	IC,74LS374,OCTAL D FLIP-FLOP	00/00/00
ACT	U14018	1.00	3135-0000-069	IC,7705,+5V SPLY VOLTAGE SUPV	00/00/00
ACT	X14001	1.00	3101-0000-031	SOCKET,68-P LCC JEDEC H/P TIN	00/00/00
ACT	X14003	3.00	3101-0000-029	SOCKET,28-P DIP,GOLD,LO PROFIL	00/00/00
ACT	X14004	-.--	3101-0000-029	SOCKET,28-P DIP,GOLD,LO PROFIL	00/00/00
ACT	X14005	1.00	3101-0500-920	SOCKET,48-P DIP,ICN-486-$5-G	00/00/00
ACT	X14019	-.--	3101-0000-029	SOCKET,28-P DIP,GOLD,LO PROFIL	00/00/00
ACT	Y14001	1.00	2363-0097-000	XTAL, 11.059000MHZ,F P HC-18/U	00/00/00

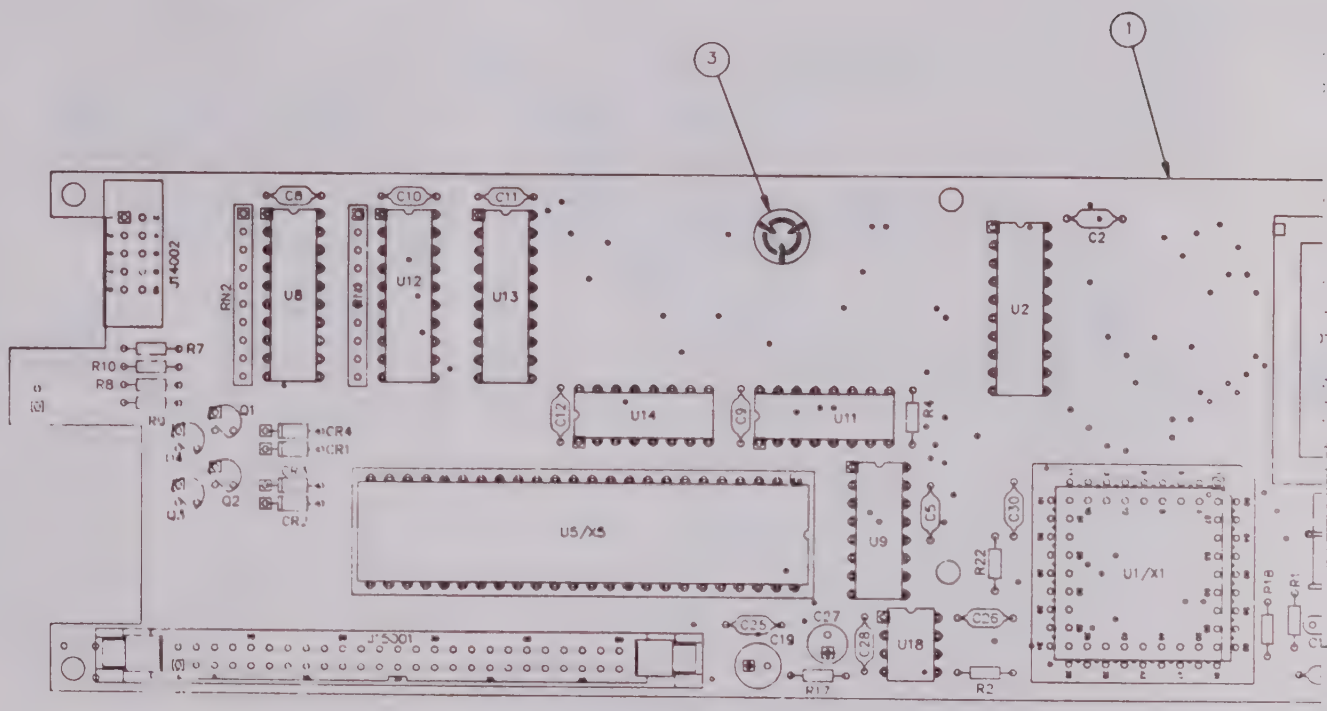
A
B
C
D
E
1
2
3
4
5
6
7
3
1
J14002
RN2
C8
C10
C11
U8
U12
U13
C2
U2
R7
R10
R8
Q1
Q2
CR4
CR1
CR2
C12
U14
C9
U11
R4
U5/X5
U9
C5
C30
R22
U1/X1
P1B
R1
C101
J15301
C25
C19
C27
C28
U18
C26
R17
R2

TOP SIDE

DATE	REV	CHANGE	APVD
6 10 91	A	DESIGN RELEASE	SL

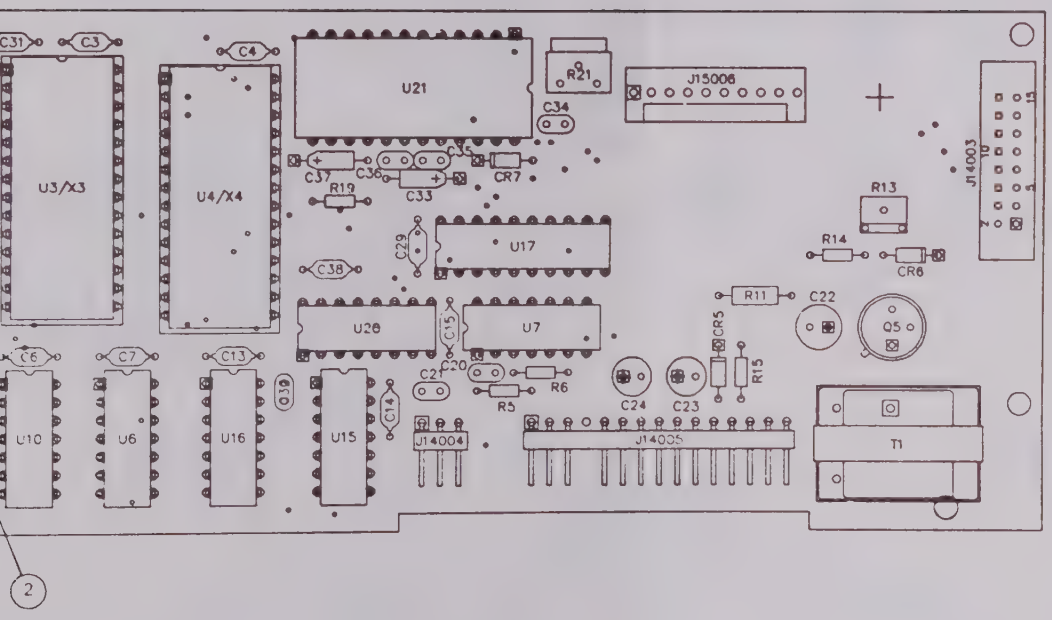

. REFERENCE DESIGNATORS CARRY AN
IGNED DESIGNATOR SERIES, THIS ASS'Y
RRIES SERIES 14000 (i.e., R1 IS R14001).

ERENCE SCHEMATIC: 0000-8830-100

DS ON X5 MUST BE CLIPPED AFTER SOLDERING (BOTTOM SIDE).

CAUTION:
CONTAINS PARTS AND ASSEMBLIES
SUSCEPTIBLE TO DAMAGE BY
ELECTROSTATIC DISCHARGE (ESD).

DRAWN SIGLER 11-17-90	IFR SYSTEMS INC
CHECKED	TITLE: PCB ASSEMBLY, FR PNL PROCESSOR W/MLD
APPROVED	SIZE D · DWG NO. 7010-8830-100 · REV A
	SCALE 2:1 · DO NOT SCALE · CAGE 51190 · SHEET 1 OF 1

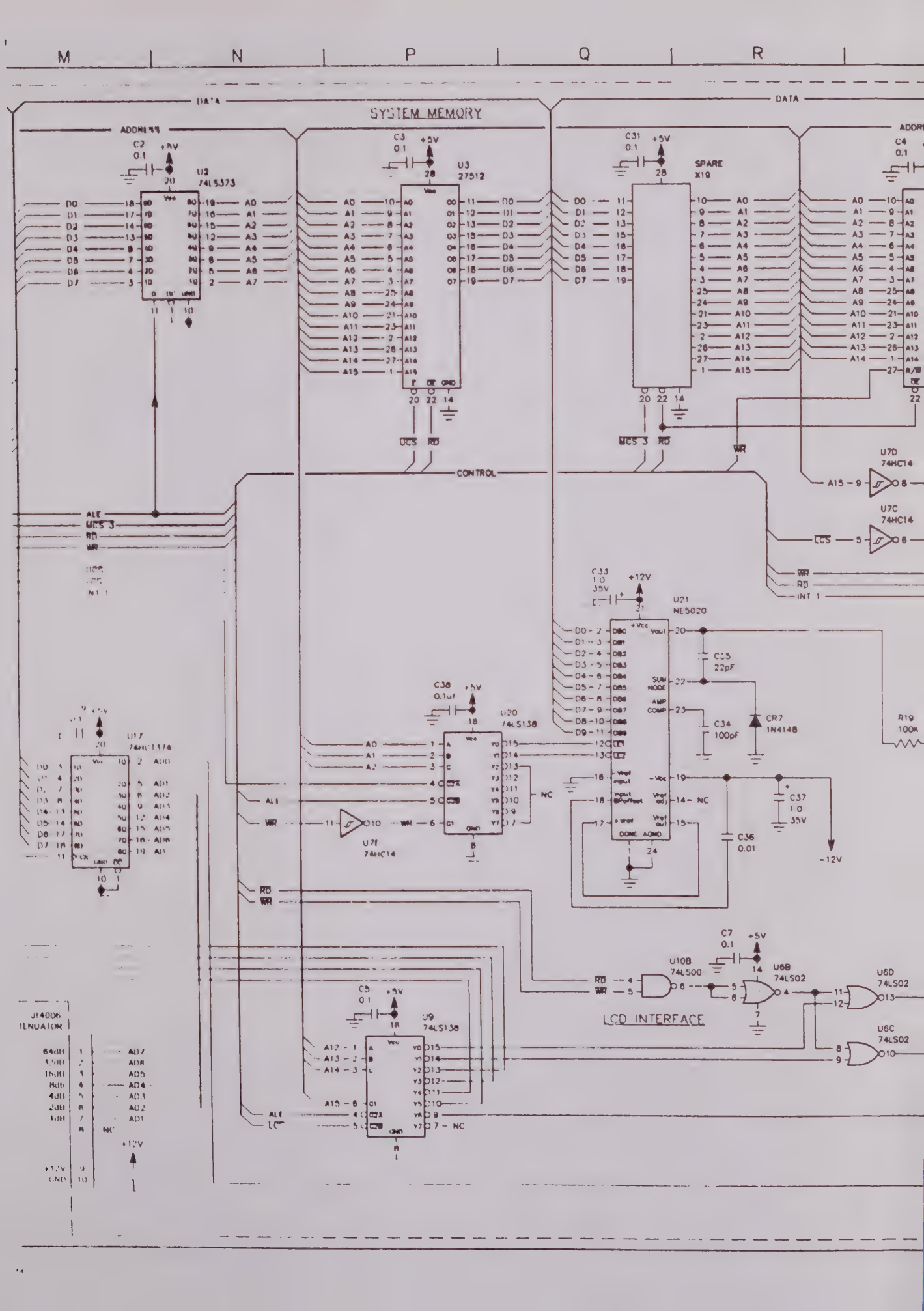
M
N
P
Q
R
DATA
SYSTEM MEMORY
ADDRESS
U2
74LS373
U3
27512
SPARE
X19
CONTROL
U7D
74HC14
U7C
74HC14
U21
NE5020
C35
22pF
C34
100pF
CR7
1N4148
R19
100K
C37
1.0
35V
C36
0.01
-12V
U20
74LS138
U7E
74HC14
U17
74HC1374
U10B
74LS00
U6B
74LS02
U6D
74LS02
U6C
74LS02
LCD INTERFACE
U9
74LS138
J14006
TENUATOR
ALE
MCS 3
RD
WR
LCS
INT 1
+5V
+12V
NC

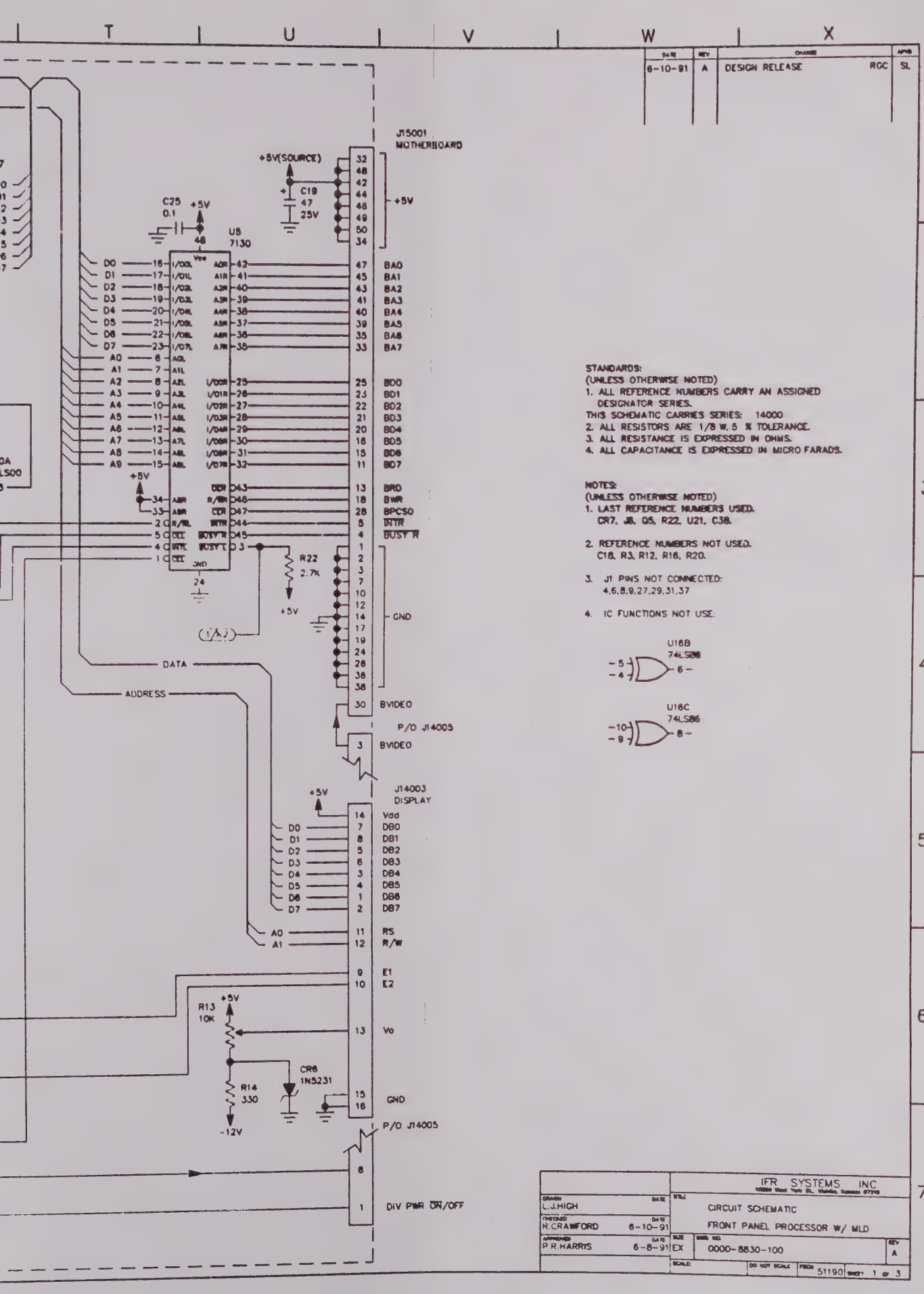
T
U
V
W
X
1
2
3
4
5
6
7
DATE
REV
CHANGE
APVD
6-10-91
A
DESIGN RELEASE
RGC
SL
J15001
MOTHERBOARD
+5V(SOURCE)
C19
47
25V
C25
0.1
+5V
U8
7130
+5V
GND
R22
2.7K
R13
10K
R14
330
CR6
1N5231
-12V
DATA
ADDRESS
P/O J14005
BVIDEO
J14003
DISPLAY
Vdd
DB0
DB1
DB2
DB3
DB4
DB5
DB6
DB7
RS
R/W
E1
E2
Vo
GND
P/O J14005
DIV PWR ON/OFF
STANDARDS:
(UNLESS OTHERWISE NOTED)
1. ALL REFERENCE NUMBERS CARRY AN ASSIGNED DESIGNATOR SERIES.
THIS SCHEMATIC CARRIES SERIES: 14000
2. ALL RESISTORS ARE 1/8 W, 5 % TOLERANCE.
3. ALL RESISTANCE IS EXPRESSED IN OHMS.
4. ALL CAPACITANCE IS EXPRESSED IN MICRO FARADS.
NOTES:
(UNLESS OTHERWISE NOTED)
1. LAST REFERENCE NUMBERS USED.
CR7, J8, Q5, R22, U21, C38.
2. REFERENCE NUMBERS NOT USED.
C18, R3, R12, R16, R20.
3. J1 PINS NOT CONNECTED:
4,6,8,9,27,29,31,37
4. IC FUNCTIONS NOT USE:
U16B
74LS86
U16C
74LS86
IFR SYSTEMS INC
L.J.HIGH
R.CRAWFORD
6-10-91
P.R.HARRIS
6-8-91
CIRCUIT SCHEMATIC
FRONT PANEL PROCESSOR W/ MLD
SIZE
E
0000-8830-100
REV
A
SCALE
DO NOT SCALE
PROG
51190
SHEET 1 of 3

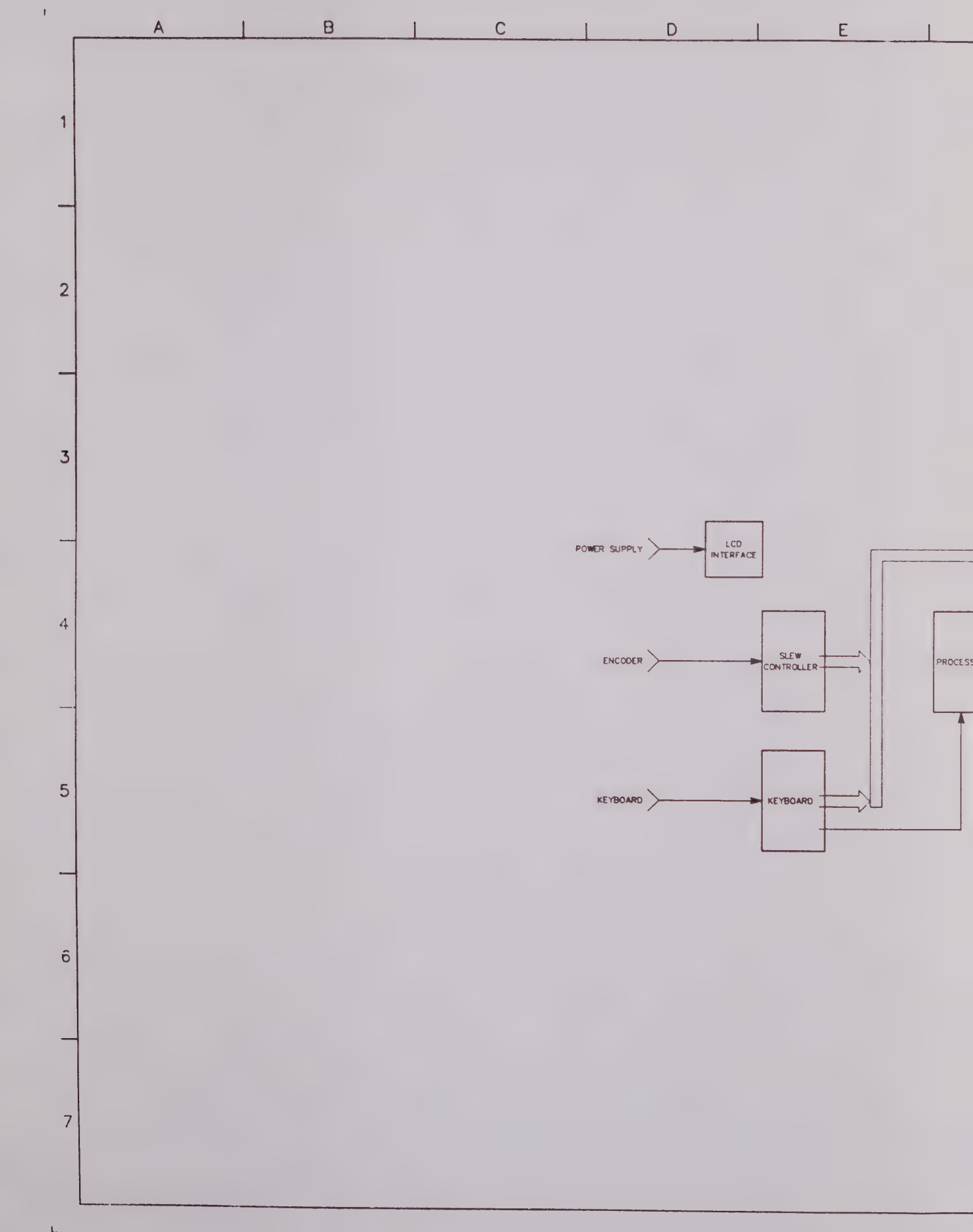
A
B
C
D
E
1
2
3
4
5
6
7
POWER SUPPLY
LCD INTERFACE
ENCODER
SLEW CONTROLLER
KEYBOARD
KEYBOARD

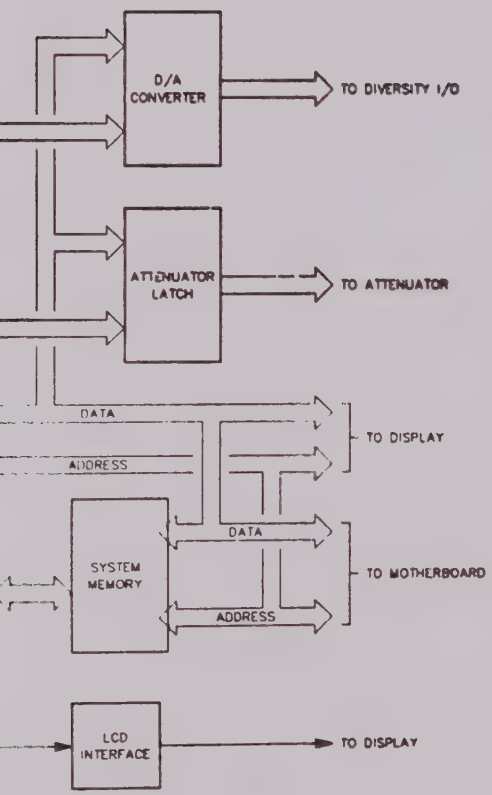
D/A CONVERTER
TO DIVERSITY I/O
ATTENUATOR LATCH
TO ATTENUATOR
DATA
ADDRESS
TO DISPLAY
SYSTEM MEMORY
DATA
ADDRESS
TO MOTHERBOARD
LCD INTERFACE
TO DISPLAY

ASSY NO.	REVISION	DESCRIPTION	LAST ECN	DATE INC
7010-8830-100	A	PCB ASSY,FT.PNL.PROC. W/MLD		10/30/71

STAT	REF.DES.	QTY	COMP. PART NO.	DESCRIPTION	EFFECTIVE
ACT	*01	1.00	1700-8820-100	PC BD,FRONT PANEL PROCESSOR	00/00/00
ACT	*02	.00	1050-0000-075	WIRE,BUS,TINNED COPPER,26GA	00/00/00
ACT	*03	1.00	2400-7856-800	LABEL,ESD	00/00/00
ACT	C14001	22.00	1521-0000-008	CAP,UF .10 50V,DIP Z5U *	00/00/00
ACT	C14002	-.--	1521-0000-008	CAP,UF .10 50V,DIP Z5U *	00/00/00
ACT	C14003	-.--	1521-0000-008	CAP,UF .10 50V,DIP Z5U *	00/00/00
ACT	C14004	-.--	1521-0000-008	CAP,UF .10 50V,DIP Z5U *	00/00/00
ACT	C14005	-.--	1521-0000-008	CAP,UF .10 50V,DIP Z5U *	00/00/00
ACT	C14006	-.--	1521-0000-008	CAP,UF .10 50V,DIP Z5U *	00/00/00
ACT	C14007	-.--	1521-0000-008	CAP,UF .10 50V,DIP Z5U *	00/00/00
ACT	C14008	-.--	1521-0000-008	CAP,UF .10 50V,DIP Z5U *	00/00/00
ACT	C14009	-.--	1521-0000-008	CAP,UF .10 50V,DIP Z5U *	00/00/00
ACT	C14010	-.--	1521-0000-008	CAP,UF .10 50V,DIP Z5U *	00/0
ACT	C14011	-.--	1521-0000-008	CAP,UF .10 50V,DIP Z5U *	00/00,
ACT	C14012	-.--	1521-0000-008	CAP,UF .10 50V,DIP Z5U *	00/0
ACT	C14013	-.--	1521-0000-008	CAP,UF .10 50V,DIP Z5U *	00/
ACT	C14014	-.--	1521-0000-008	CAP,UF .10 50V,DIP Z5U *	00/
ACT	C14015	-.--	1521-0000-008	CAP,UF .10 50V,DIP Z5U *	00/
ACT	C14016	2.00	1506-0270-017	CAP,PF 27, 100V,NPO, 5	00/00/
ACT	C14017	-.--	1506-0270-017	CAP,PF 27, 100V,NPO, 5	00/00/
ACT	C14018	5.00	0002-0000-000	*** REF DESIG NOT USED ***	00/00/00
ACT	C14019	1.00	1580-4700-220	CAP, uF 47, 25V,ELE, RAD *	00/00/00
ACT	C14020	3.00	1506-0103-017	CAP, uF .010, 100V, NPO *	00/00/00
ACT	C14021	-.--	1506-0103-017	CAP, uF .010, 100V, NPO *	00/00/0(
ACT	C14022	1.00	1580-4702-105	CAP, UF 47, 10V, ELE RDL *	00/00/00
ACT	C14023	2.00	1580-1000-200	CAP,UF, 10, 25V,ELE RDL	00/00/00

ASSY NO.	REVISION	DESCRIPTION	LAST ECN	DATE INC
7010-8830-100	A	PCB ASSY,FT.PNL.PROC. W/MLD		10/30/71

STAT	REF.DES.	QTY	COMP. PART NO.	DESCRIPTION	EFFECTIVE
ACT	C14024	-.--	1580-1000-200	CAP,UF, 10, 25V,ELE RDL	00/00/00
ACT	C14025	-.--	1521-0000-008	CAP,UF .10 50V,DIP Z5U *	00/00/00
ACT	C14026	-.--	1521-0000-008	CAP,UF .10 50V,DIP Z5U *	00/00/00
ACT	C14027	1.00	1580-1092-450	CAP, uF 1.0, 50V ELE RDL *	00/00/00
ACT	C14028	-.--	1521-0000-008	CAP,UF .10 50V,DIP Z5U *	00/00/00
ACT	C14029	-.--	1521-0000-008	CAP,UF .10 50V,DIP Z5U *	00/00/00
ACT	C14030	-.--	1521-0000-008	CAP,UF .10 50V,DIP Z5U *	00/00/00
ACT	C14031	-.--	1521-0000-008	CAP,UF .10 50V,DIP Z5U *	00/00/00
ACT	C14032	2.00	1506-0101-017	CAP,pF 100, 100V NPO 5 *	00/00/00
ACT	C14033	2.00	1507-0105-118	CAP,UF 1.0, 35V,TANT, 5	00/00/00
ACT	C14034	-.--	1506-0101-017	CAP,pF 100, 100V NPO 5 *	00/00/00
ACT	C14035	1.00	1506-0220-017	CAP,PF 22, 100V,NPO, 5	00/00/00
ACT	C14036	-.--	1506-0103-017	CAP, uF .010, 100V, NPO *	00/00/00
ACT	C14037	-.--	1507-0105-118	CAP,UF 1.0, 35V,TANT, 5	00/00/00
ACT	C14038	-.--	1521-0000-008	CAP,UF .10 50V,DIP Z5U *	00/00/00
ACT	CR14001	4.00	4816-0000-001	DIODE,5082-2800,S BAR, 70VBR	00/00/00
ACT	CR14002	-.--	4816-0000-001	DIODE,5082-2800,S BAR, 70VBR	00/00/00
ACT	CR14003	-.--	4816-0000-001	DIODE,5082-2800,S BAR, 70VBR	00/00/00
ACT	CR14004	-.--	4816-0000-001	DIODE,5082-2800,S BAR, 70VBR	00/00/00
ACT	CR14005	1.00	4818-0000-004	DIODE, 1N5234B ,ZENER,6.2V,.5W	00/0[illegible]
ACT	CR14006	1.00	4818-0000-003	DIODE, ZENER, 5, 1V, 5W *	00/00/[illegible]
ACT	CR14007	1.00	4815-0000-003	DIODE, 1N4148 ,SIGNAL, 75PRV	00/0[illegible]
ACT	J14002	1.00	2129-1001-010	CONN,HEADER,10-P STR 609-1027*	00/00/[illegible]
ACT	J14003	1.00	2129-1001-016	CONN,RBN CA 16-P .1X.1GRD HDR*	00/00/[illegible]
ACT	J14004	1.00	2115-1002-003	CONN,MOLEX 22-05-2031 3PIN RA	00/0[illegible]
ACT	J14005	1.00	2115-1002-115	CONN,MOLEX 22-12-2151,GOLD PLT	00/00/[illegible]

ASSY NO.	REVISION	DESCRIPTION	LAST ECN	DATE INC
7010-8830-100	A	PCB ASSY,FT.PNL.PROC. W/MLD		10/30/71

STAT	REF.DES.	QTY	COMP. PART NO.	DESCRIPTION	EFFECTIVE
ACT	J15001	1.00	2129-1050-050	CONN,HEADER,STR,50-P,3433-2202	00/00/00
ACT	J15006	1.00	2115-0005-010	CONN,LKING HEADER 10P GOLD *	00/00/00
ACT	Q14001	4.00	4807-0000-001	TRANS, 2N3903 ,NPN HS SW	00/00/00
ACT	Q14002	-.--	4807-0000-001	TRANS, 2N3903 ,NPN HS SW	00/00/00
ACT	Q14003	-.--	4807-0000-001	TRANS, 2N3903 ,NPN HS SW	00/00/00
ACT	Q14004	-.--	4807-0000-001	TRANS, 2N3903 ,NPN HS SW	00/00/00
ACT	Q14005	1.00	4801-0000-002	TRANS, 2N2405 ,NPN AMP	00/00/00
ACT	R14001	2.00	4701-0391-003	RES, 5, 1/8W, 390 OHM	00/00/00
ACT	R14002	2.00	4701-0102-003	RES, 5, 1/8W, 1.0K OHM	00/00/00
ACT	R14003	-.--	0002-0000-000	*** REF DESIG NOT USED ***	00/00/00
ACT	R14004	1.00	4701-0472-003	RES, 5, 1/8W, 4.7K OHM	00/00/00
ACT	R14005	2.00	4701-0223-003	RES, 5, 1/8W, 22K OHM	00/00/00
ACT	R14006	-.--	4701-0223-003	RES, 5, 1/8W, 22K OHM	00/00/00
ACT	R14007	4.00	4701-0123-003	RES, 5, 1/8W, 12K OHM	00/00/00
ACT	R14008	-.--	4701-0123-003	RES, 5, 1/8W, 12K OHM	00/00/00
ACT	R14009	-.--	4701-0123-003	RES, 5, 1/8W, 12K OHM	00/00/00
ACT	R14010	-.--	4701-0123-003	RES, 5, 1/8W, 12K OHM	00/00/00
ACT	R14011	1.00	4702-0100-003	RES, 5, 1/4W, 10 OHM *	00/00/00
ACT	R14012	-.--	0002-0000-000	*** REF DESIG NOT USED ***	00/00/00
ACT	R14013	1.00	4753-0103-002	POT, 10K OHM	00/00/00
ACT	R14014	1.00	4701-0331-003	RES, 5, 1/8W, 330 OHM	00/00/00
ACT	R14015	1.00	4701-0101-003	RES, 5, 1/8W, 100 OHM *	00/00/00
ACT	R14016	-.--	0002-0000-000	*** REF DESIG NOT USED ***	00/00/00
ACT	R14017	-.--	4701-0102-003	RES, 5, 1/8W, 1.0K OHM	00/00/00
ACT	R14018	-.--	4701-0391-003	RES, 5, 1/8W, 390 OHM	00/00/00
ACT	R14019	1.00	4701-0104-003	RES, 5, 1/8W, 100K OHM	00/00/00

ASSY NO.	REVISION	DESCRIPTION	LAST ECN	DATE INC
7010-8830-100	A	PCB ASSY,FT.PNL.PROC. W/MLD		10/30/71

STAT	REF.DES.	QTY	COMP. PART NO.	DESCRIPTION	EFFECTIVE
ACT	R14020	-.--	0002-0000-000	*** REF DESIG NOT USED ***	00/00/00
ACT	R14021	1.00	4756-3150-300	POT, 50K OHM, 3339W-1-503	00/00/00
ACT	R14022	1.00	4701-0272-003	RES, 5, 1/8W, 2.7K OHM	00/00/00
ACT	RN14001	2.00	4690-0912-300	RES NET,SIP,BUSS, 12K OHM,10-P	00/00/00
ACT	RN14002	-.--	4690-0912-300	RES NET,SIP,BUSS, 12K OHM,10-P	00/00/00
ACT	T14001	1.00	4600-6800-401	INVERTER SUPPLY PURCHASED	00/00/00
ACT	U14001	1.00	3135-0000-068	IC,80188,8/16-B CPU,PLCC	00/00/00
ACT	U14002	1.00	3211-3373-000	IC,74LS373,8X 3ST XPARENT LTCH	00/00/00
ACT	U14004	1.00	3260-0100-700	IC,CMOS,RAM 32X8 5857 (256)	00/00/00
ACT	U14005	1.00	3271-0005-000	IC, 7130, 1KX8 DUAL PORT RAM	00/00/00
ACT	U14006	1.00	3131-0000-032	IC,74LS02,QUAD 2-INPUT NOR	00/00/00
ACT	U14007	1.00	3214-9014-000	IC,74HC14,HEX INV SCHMITT TRIG	00/00/00
ACT	U14008	3.00	3214-8244-000	IC 74HCT244 OCTAL BUF/DR/RCV *	00/00/00
ACT	U14009	2.00	3131-0000-045	IC,74LS138,3-TO-8 DCDR/MPLXR	00/00/00
ACT	U14010	1.00	3131-0000-044	IC,74LS00,QUAD 2-INPUT NAND	00/00/00
ACT	U14011	2.00	3131-0000-030	IC,74LS191,BIN SYN U/D COUNTER	00/00/00
ACT	U14012	-.--	3214-8244-000	IC 74HCT244 OCTAL BUF/DR/RCV *	00/00/00
ACT	U14013	-.--	3214-8244-000	IC 74HCT244 OCTAL BUF/DR/RCV *	00/00/00
ACT	U14014	-.--	3131-0000-030	IC,74LS191,BIN SYN U/D COUNTER	00/00/00
ACT	U14015	1.00	3131-0000-038	IC,74LS74A,DUAL D FLIP-FLOP	00/00/00
ACT	U14016	1.00	3211-3086-000	IC,74LS86,QUAD 2-INPUT EXCL-OR	00/00/00
ACT	U14017	1.00	3214-8374-000	IC,74HCT374,OCTAL D FLIP-FLOP	00/00/00
ACT	U14018	1.00	3135-0000-069	IC,7705,+5V SPLY VOLTAGE SUPV	00/00/00
ACT	U14020	-.--	3131-0000-045	IC,74LS138,3-TO-8 DCDR/MPLXR	00/00/00
ACT	U14021	1.00	3228-0006-000	IC,5020,10-B D/A CONVERTER	00/00/00
ACT	X14001	1.00	3101-0000-031	SOCKET,68-P LCC JEDEC H/P TIN	00/00/00

ASSY NO.	REVISION	DESCRIPTION	LAST ECN	DATE INC
7010-8830-100	A	PCB ASSY,FT.PNL.PROC. W/MLD		10/30/71

STAT	REF.DES.	QTY	COMP. PART NO.	DESCRIPTION	EFFECTIVE
ACT	X14003	3.00	3101-0000-029	SOCKET,28-P DIP,GOLD,LO PROFIL	00/00/00
ACT	X14004	-.--	3101-0000-029	SOCKET,28-P DIP,GOLD,LO PROFIL	00/00/00
ACT	X14005	1.00	3101-0500-920	SOCKET,48-P DIP,ICN-486-$5-G	00/00/00
ACT	X14019	-.--	3101-0000-029	SOCKET,28-P DIP,GOLD,LO PROFIL	00/00/00
ACT	Y14001	1.00	2363-0097-000	XTAL, 11.059000MHZ,F P HC-18/U	00/00/00

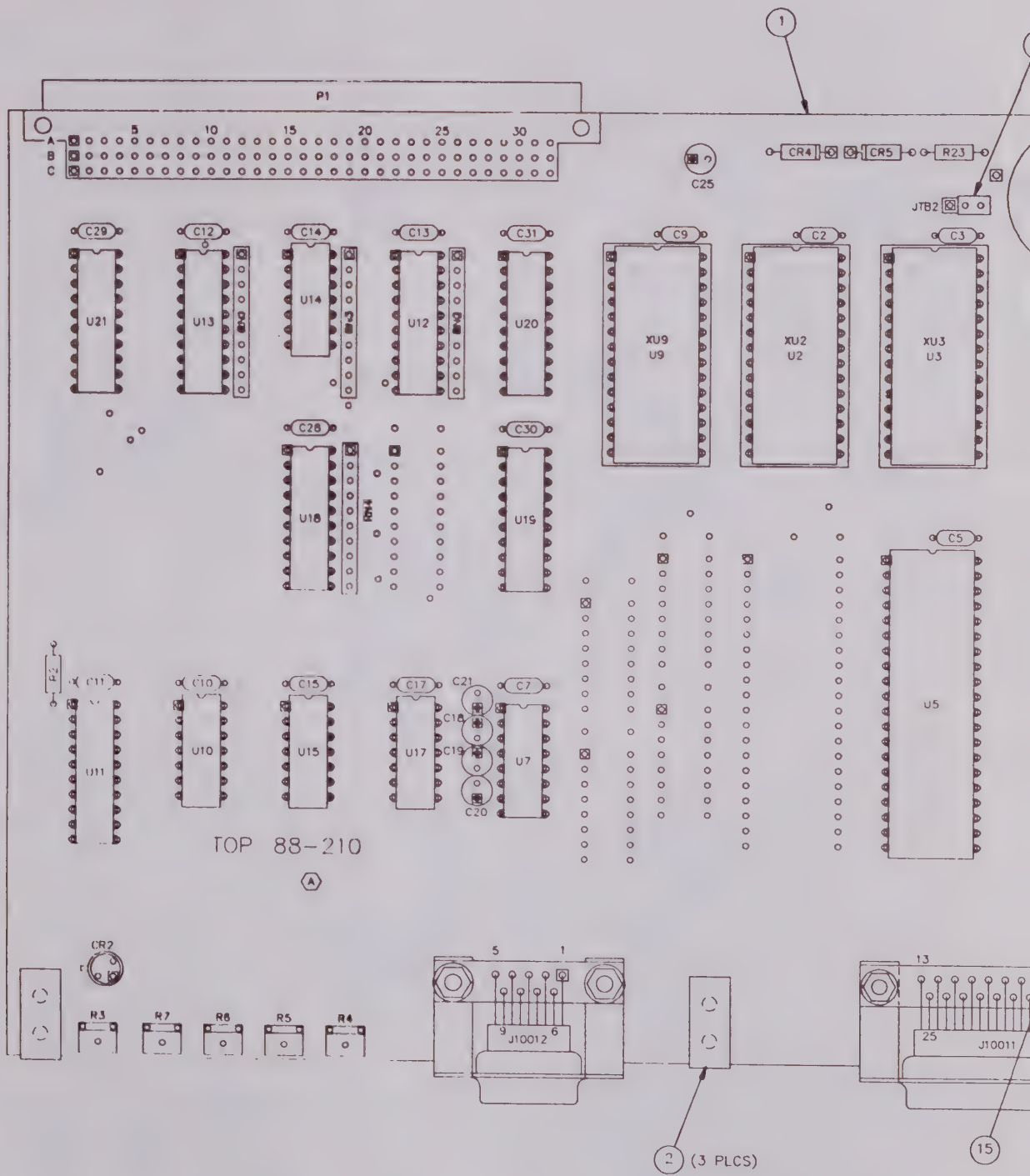
P1
C25
CR4
CR5
R23
JTB2
C29
C12
C14
C13
C31
C9
C2
C3
U21
U13
U14
U12
U20
XU9
U9
XU2
U2
XU3
U3
C28
C30
U18
U19
C5
U5
C11
C10
C15
C17
C21
C7
C18
C19
C20
U11
U10
U15
U17
U7
TOP 88-210
A
CR2
R3
R7
R6
R5
R4
J10012
J10011
(3 PLCS)

DATE	REV	CHANGE	APVD
5 30 91	A	DESIGN RELEASE	JL

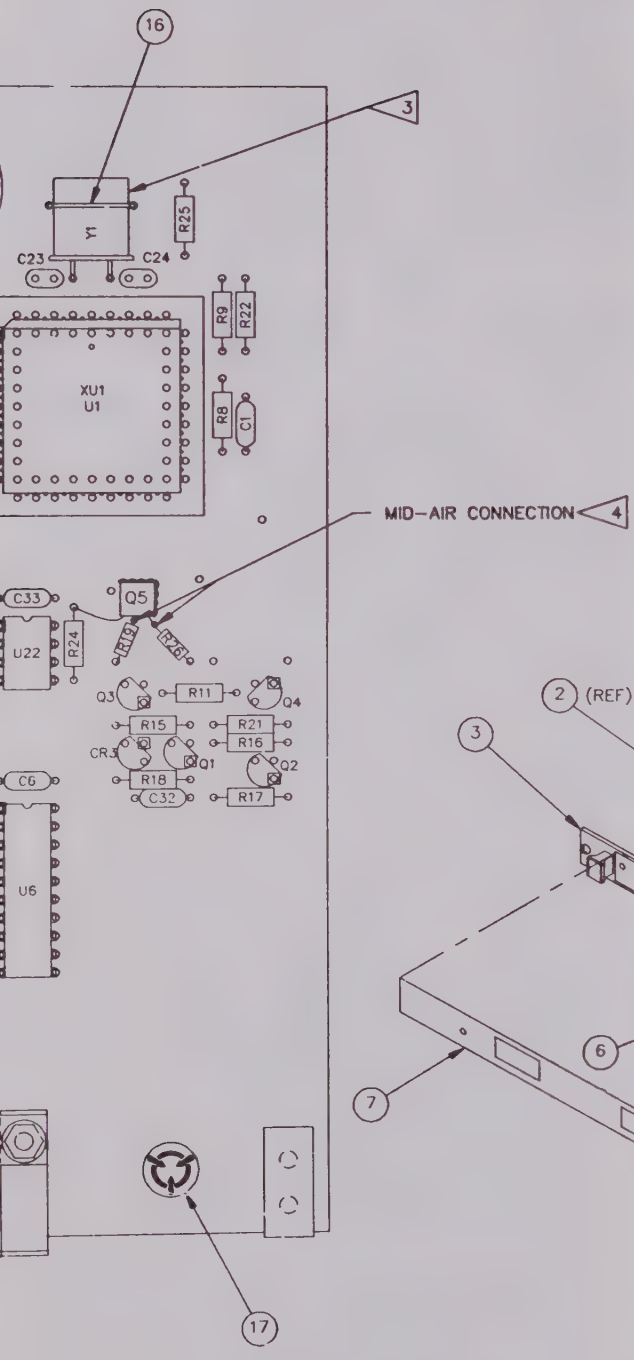

NOTES:

1. ALL REFERENCE DESIGNATORS CARRY AN ASSIGNED DESIGNATOR SERIES, THIS ASS'Y CARRIES SERIES 12000 (i.e., R1 IS R12001).
2. REFERENCE SCHEMATIC: 0000-8831-000

3 CRYSTAL CASE MUST NOT BE HEATED. DO NOT ALLOW SOLDER TO FLOW OR COME IN CONTACT WITH CRYSTAL.

4 ATTACH Q5 FACE UP TO PC BD WITH TAK-PAK.

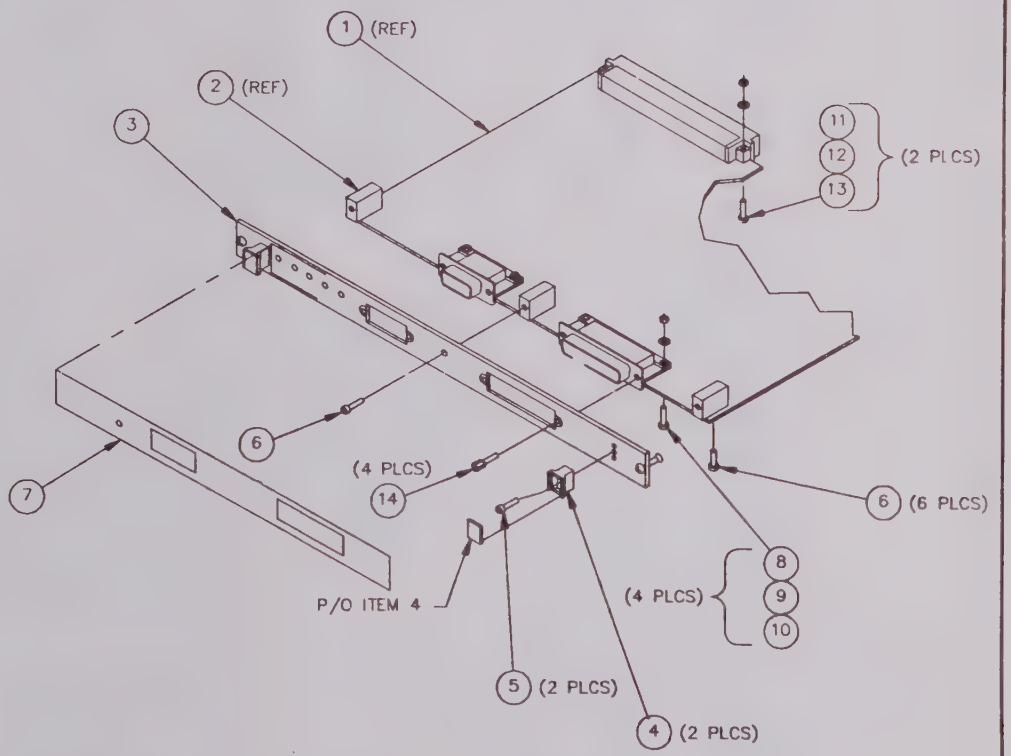

CAUTION:
CONTAINS PARTS AND ASSEMBLIES SUSCEPTIBLE TO DAMAGE BY ELECTROSTATIC DISCHARGE (ESD).

COORDINATED ENGINEERING

DRAWN	SIGLER 11-21-90	IFR SYSTEMS INC 10200 West York St., Wichita, Kansas 67215
CHECKED	Keith Crawford 5/24/91	TITLE: PCB ASSEMBLY, PROCESSOR
APPROVED	5/29/91	SIZE: D; DWG. NO.: 7010-8831-000; REV: A
		SCALE: 2:1; DO NOT SCALE; CAGE 51190; SHEET 1 OF 1

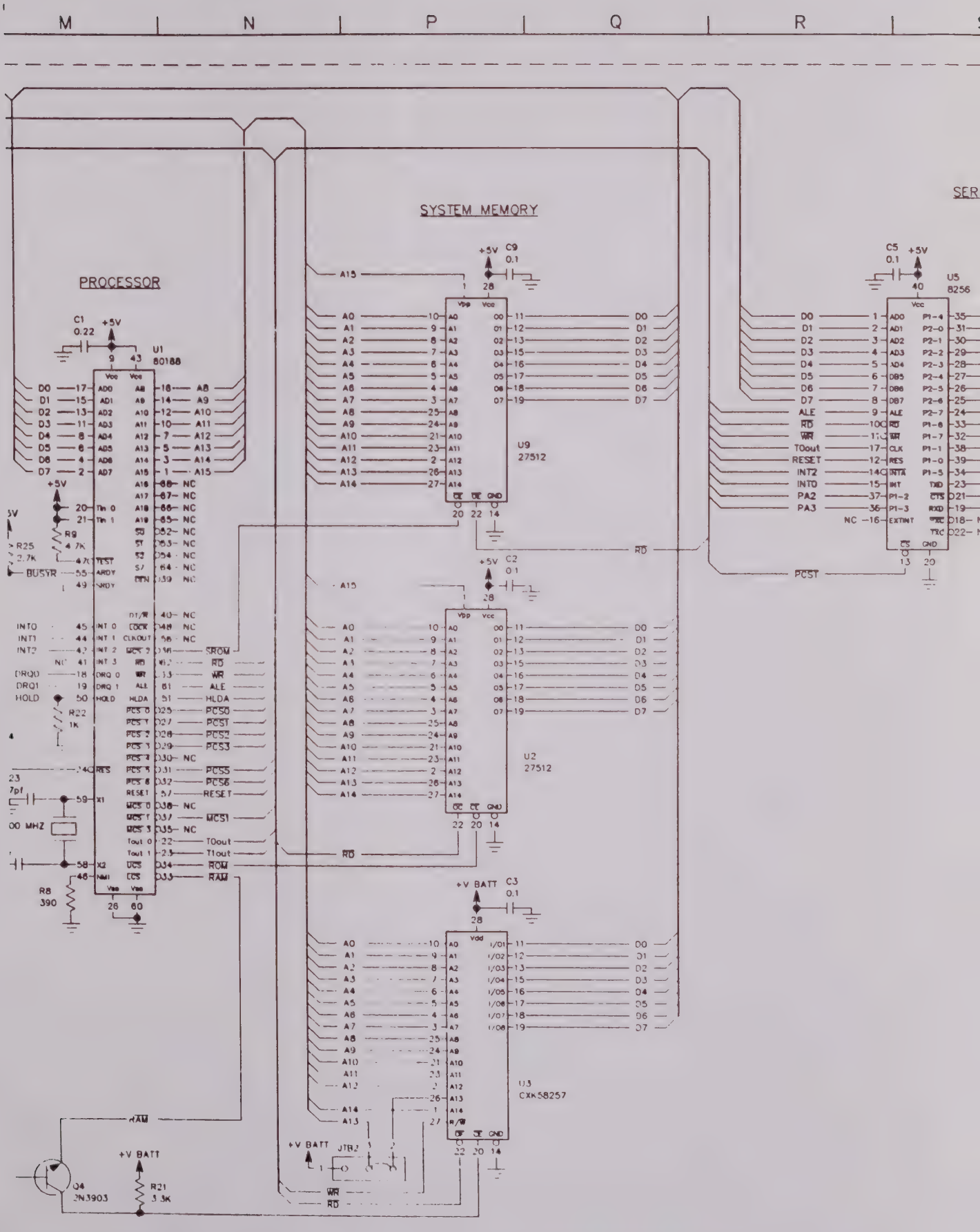
M
N
P
Q
R
SYSTEM MEMORY
PROCESSOR
SER
U1
80188
U9
27512
U2
27512
U3
CXK58257
U5
8256
C1
0.22
C9
0.1
C2
0.1
C3
0.1
C5
0.1
+5V
+V BATT
R9
4.7K
R25
2.7K
R22
1K
R8
390
R21
3.3K
Q4
2N3903
JTB2
BUSYR
INT0
INT1
INT2
DRQ0
DRQ1
HOLD
SROM
RD
WR
ALE
HLDA
PCS0
PCS1
PCS2
PCS3
PCS5
PCS6
RESET
MCS1
TOout
T1out
ROM
RAM
PCST
ALE
TOout
RESET
INT2
INT0
PA2
PA3
NC

DATE	REV	CHANGE	APVD
53091	A	DESIGN RELEASE	JL

LEL I/O

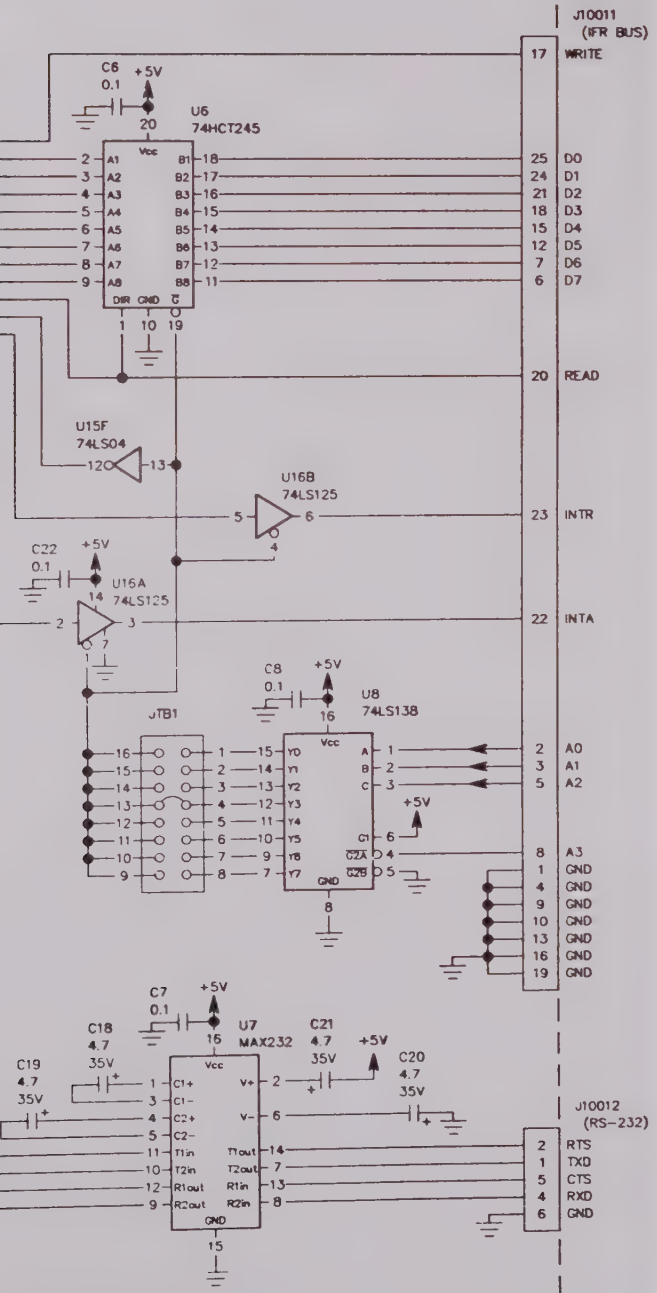

PROCESSOR (1200)
PCBD 1700-8821-000
PCBD ASSY 7010-8831-000

STANDARDS:
(UNLESS OTHERWISE NOTED)
1. ALL REFERENCE NUMBERS CARRY AN ASSIGNED DESIGNATOR SERIES.
THIS SCHEMATIC CARRIES SERIES: 1200
2. ALL RESISTORS ARE 1/4 W, 5 % TOLERANCE.
3. ALL RESISTANCE IS EXPRESSED IN OHMS.
4. ALL CAPACITANCE IS EXPRESSED IN MICROFARADS.

NOTES:
(UNLESS OTHERWISE NOTED)
1. LAST REFERENCE NUMBERS USED.
BT1 C35 J10012 Q5 R26 RN4 JTB2 U22
Y1 CR5 P12001

2. REFERENCE NUMBERS NOT USED.
C16 C26 C27 CR1 R10 R12 R13 R14 R20

3. CONNECTOR PINS NOT USED:
J10011: 11 14
J10012: 3 7 8 9
P12001: 17A 19A 20A 22A 31A
3B 4B 5B 6B 17B 28B 29B 31B
1C 2C 3C 5C 7C 8C 18C 19C 21C 22C 31C

4. IC GATES NOT USED:

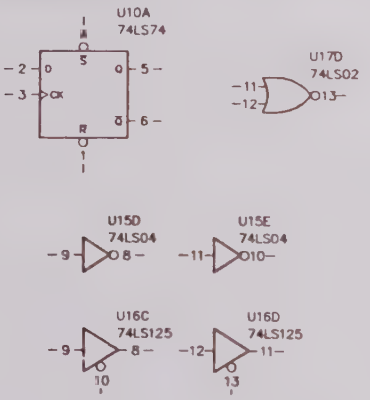

DRAWN J.MILLER	DATE 4-23-88	IFR SYSTEMS INC 10200 West York St., Wichita, Kansas 67215	
CHECKED R.CRAWFORD	DATE 5-28-91	TITLE CIRCUIT SCHEMATIC PROCESSOR	
APPROVED	DATE 5/31/91	SIZE EX	DWG. NO. 0000-8831-000 REV A
		SCALE: DO NOT SCALE	FSCM 51190 SHEET 1 OF 3

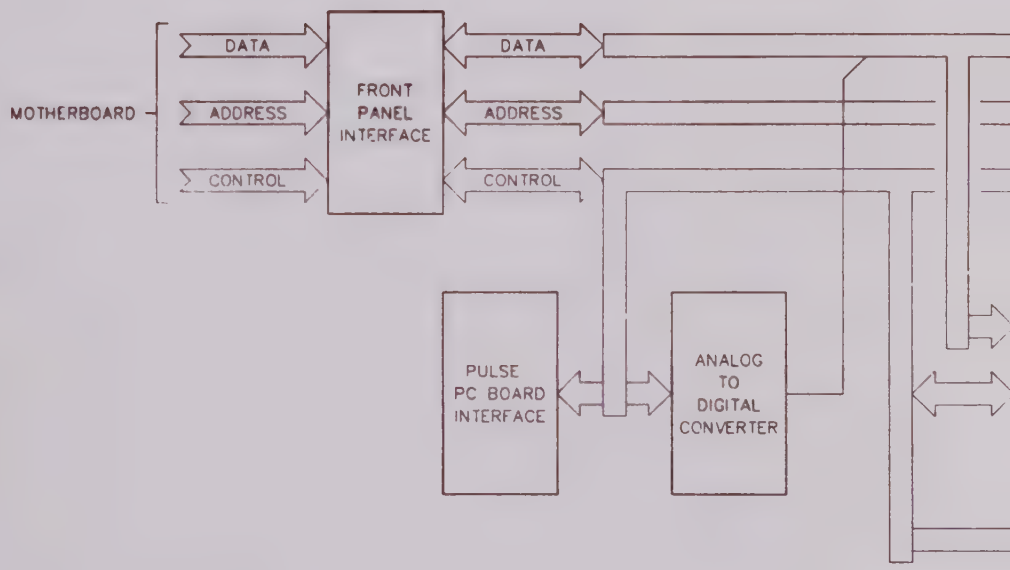
MOTHERBOARD
DATA
ADDRESS
CONTROL
FRONT PANEL INTERFACE
DATA
ADDRESS
CONTROL
PULSE PC BOARD INTERFACE
ANALOG TO DIGITAL CONVERTER

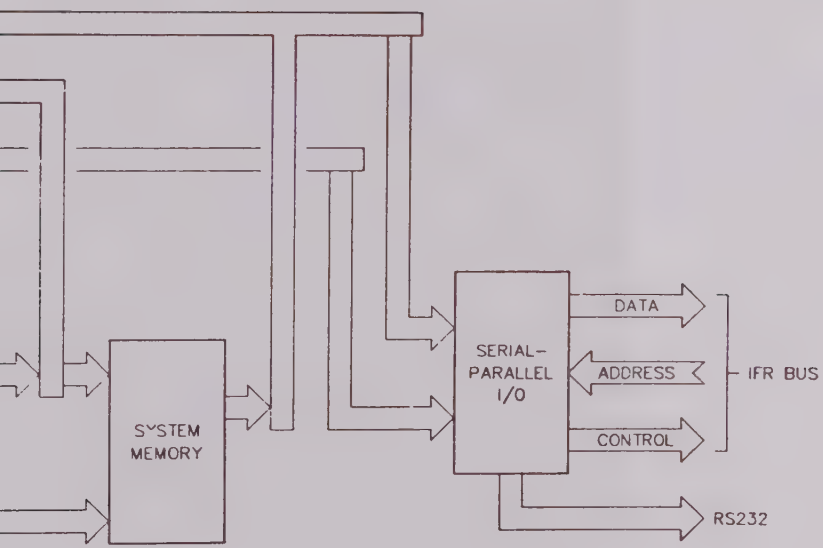
SYSTEM
MEMORY
SERIAL-
PARALLEL
I/O
DATA
ADDRESS
CONTROL
IFR BUS
RS232

PRINT DATE 91/06/19 BILL OF MATERIAL LISTED BY REF. DESIG. PAGE 1

ASSY NO.	REVISION	DESCRIPTION	LAST ECN	DATE INC
7010-8831-000	A	PCB ASSY, PROCESSOR		10/30/71

STAT	REF.DES.	QTY	COMP. PART NO.	DESCRIPTION		EFFECTIVE
ACT	*01	1.00	1700-8821-000	PC BD, PROCESSOR		00/00/00
ACT	*02	3.00	2100-6751-600	BLOCK,PC BD MTG		00/00/00
ACT	*03	1.00	1414-6750-700	COVER,PROCESSOR PC BD ASSY		87/05/05
ACT	*04	2.00	1407-0000-003	HANDLE,FT PNL,GREY PLASTIC		87/05/05
ACT	*05	2.00	2803-0250-002	SCREW,4-40 X 1/4 SHC		87/05/05
ACT	*06	7.00	2803-0250-006	SCREW,4-40 X 1/4 PPHM		87/05/05
ACT	*07	1.00	2400-8850-400	LABEL,PROCESSOR ASSY	*	00/00/00
ACT	*08	4.00	2803-0313-006	SCREW,4-40 X 5/16 PPHM		87/05/20
ACT	*09	4.00	2840-0000-003	WASHER,LOCK,INT TOOTH,4		87/05/20
ACT	*10	4.00	2850-0000-020	NUT,HEX,SMALL PAT,4-40		87/05/20
ACT	*11	2.00	2801-0438-006	SCREW,2-56 X 7/16 PPHM		87/05/20
ACT	*12	2.00	2840-0000-004	WASHER,LOCK,INT TOOTH,2		87/05/20
ACT	*13	2.00	2850-0000-012	NUT,HEX,SMALL PAT,2-56		87/05/20
ACT	*14	4.00	2850-7601-301	SCREW,.188L4-40.19HH,4-40X.300		87/05/20
ACT	*15	2.00	2132-0004-000	CONN,JUMPER BLOCK,.1C,.025 PIN		00/00/00
ACT	*16	.08	1050-0000-074	WIRE,BUS,TINNED COPPER,24GA		00/00/00
ACT	*17	1.00	2400-7856-800	LABEL,ESD		00/00/00
ACT	BT12001	1.00	4000-9232-501	BATT,160MAH,BR2325P2 SLDRTB+3V		00/00/00
ACT	C12001	1.00	1627-2240-450	CAP,uF .22, 50V	*	00/00/00
ACT	C12002	23.00	1521-0000-008	CAP,UF .10 50V,DIP Z5U	*	00/00/00
ACT	C12003	-.--	1521-0000-008	CAP,UF .10 50V,DIP Z5U	*	00/00/00
ACT	C12004	-.--	1521-0000-008	CAP,UF .10 50V,DIP Z5U	*	00/00/00
ACT	C12005	-.--	1521-0000-008	CAP,UF .10 50V,DIP Z5U	*	00/00/00
ACT	C12006	-.--	1521-0000-008	CAP,UF .10 50V,DIP Z5U	*	00/00/00
ACT	C12007	-.--	1521-0000-008	CAP,UF .10 50V,DIP Z5U	*	00/00/00
ACT	C12008	-.--	1521-0000-008	CAP,UF .10 50V,DIP Z5U	*	00/00/00

ASSY NO.	REVISION	DESCRIPTION	LAST ECN	DATE INC
7010-8831-000	A	PCB ASSY, PROCESSOR		10/30/71

STAT	REF.DES.	QTY	COMP. PART NO.	DESCRIPTION	EFFECTIVE
ACT	C12009	-.--	1521-0000-008	CAP,UF .10 50V,DIP Z5U *	00/0[illegible]
ACT	C12010	-.--	1521-0000-008	CAP,UF .10 50V,DIP Z5U *	00/0[illegible]
ACT	C12011	-.--	1521-0000-008	CAP,UF .10 50V,DIP Z5U *	00/00/00
ACT	C12012	-.--	1521-0000-008	CAP,UF .10 50V,DIP Z5U *	00/00/00
ACT	C12013	-.--	1521-0000-008	CAP,UF .10 50V,DIP Z5U *	00/00/00
ACT	C12014	-.--	1521-0000-008	CAP,UF .10 50V,DIP Z5U *	00/00/00
ACT	C12015	-.--	1521-0000-008	CAP,UF .10 50V,DIP Z5U *	00/00/00
ACT	C12016	9.00	0002-0000-000	*** REF DESIG NOT USED ***	00/00/00
ACT	C12017	-.--	1521-0000-008	CAP,UF .10 50V,DIP Z5U *	00/00/00
ACT	C12018	4.00	1580-4792-305	CAPACITOR 4.7 uF,35V *	00/00/00
ACT	C12019	-.--	1580-4792-305	CAPACITOR 4.7 uF,35V *	00/00/00
ACT	C12020	-.--	1580-4792-305	CAPACITOR 4.7 uF,35V *	00/00/00
ACT	C12021	-.--	1580-4792-305	CAPACITOR 4.7 uF,35V *	00/00/00
ACT	C12022	-.--	1521-0000-008	CAP,UF .10 50V,DIP Z5U *	00/00/00
ACT	C12023	2.00	1506-0270-017	CAP,PF 27, 100V,NPO, 5	00/00/00
ACT	C12024	-.--	1506-0270-017	CAP,PF 27, 100V,NPO, 5	00/00/00
ACT	C12025	1.00	1580-4702-105	CAP, UF 47, 10V, ELE RDL *	00/00/00
ACT	C12026	-.--	0002-0000-000	*** REF DESIG NOT USED ***	00/00/00
ACT	C12027	-.--	0002-0000-000	*** REF DESIG NOT USED ***	00/00/00
ACT	C12028	-.--	1521-0000-008	CAP,UF .10 50V,DIP Z5U *	00/00/00
ACT	C12029	-.--	1521-0000-008	CAP,UF .10 50V,DIP Z5U *	00/00/00
ACT	C12030	-.--	1521-0000-008	CAP,UF .10 50V,DIP Z5U *	00/00/00
ACT	C12031	-.--	1521-0000-008	CAP,UF .10 50V,DIP Z5U *	00/00/00
ACT	C12032	-.--	1521-0000-008	CAP,UF .10 50V,DIP Z5U *	00/00/00
ACT	C12033	-.--	1521-0000-008	CAP,UF .10 50V,DIP Z5U *	00/00/00
ACT	C12034	-.--	1521-0000-008	CAP,UF .10 50V,DIP Z5U *	00/00/00

ASSY NO.	REVISION	DESCRIPTION	LAST ECN	DATE INC
7010-8831-000	A	PCB ASSY, PROCESSOR		10/30/71

STAT	REF.DES.	QTY	COMP. PART NO.	DESCRIPTION	EFFECTIVE
ACT	C12035	1.00	1507-0105-018	CAP,uF 1.0, 35V,TANT, 20 *	00/00/00
ACT	CR12001	-.--	0002-0000-000	*** REF DESIG NOT USED ***	00/00/00
ACT	CR12002	1.00	3223-0006-000	IC,PRECISION TEMP SENSOR *	87/04/27
ACT	CR12003	1.00	3225-0001-000	IC, 336+2.5V/-2.5V REF *	00/0[illegible]
ACT	CR12004	2.00	4920-5151-300	DIODE,11DQ03,RECT,PS,30V,1A *	87/04/[illegible]
ACT	CR12005	-.--	4920-5151-300	DIODE,11DQ03,RECT,PS,30V,1A *	87/04/[illegible]
ACT	J10011	1.00	2116-0001-000	CONN,D-SUB,F,25-P,PCM,R.A	00/0[illegible]/00
ACT	J10012	1.00	2205-3310-104	CONN,D-SUB,F,9PIN PCM RA	87/0[illegible]/27
ACT	JTB12001	1.00	2129-1087-016	CONN, AMP 87227-8 *	00/0[illegible]/00
ACT	JTB12002	1.00	2115-1001-003	CONN,MOLEX 22-03-2031	87/06/15
ACT	P12001	1.00	2129-1002-196	CONN,RA DIN MALE SHORT 96P *	00/00/00
ACT	Q12001	3.00	4807-0000-002	TRANS, 2N3905 ,PNP HS SW	00/00/00
ACT	Q12002	-.--	4807-0000-002	TRANS, 2N3905 ,PNP HS SW	00/00/00
ACT	Q12003	2.00	4807-0000-001	TRANS, 2N3903 ,NPN HS SW	00/00/00
ACT	Q12004	-.--	4807-0000-001	TRANS, 2N3903 ,NPN HS SW	00/00/00
ACT	Q12005	-.--	4807-0000-002	TRANS, 2N3905 ,PNP HS SW	00/00/00
ACT	R12001	2.00	4702-0472-003	RES, 5, 1/4W, 4.7K OHM	00/00/00
ACT	R12002	1.00	4702-0123-003	RES, 5, 1/4W, 12K OHM	00/00/00
ACT	R12003	5.00	4753-0103-002	POT, 10K OHM	00/00/00
ACT	R12004	-.--	4753-0103-002	POT, 10K OHM	00/00/00
ACT	R12005	-.--	4753-0103-002	POT, 10K OHM	00/00/00
ACT	R12006	-.--	4753-0103-002	POT, 10K OHM	00/00/00
ACT	R12007	-.--	4753-0103-002	POT, 10K OHM	00/00/00
ACT	R12008	1.00	4702-0391-003	RES,5, 1/4W 390 OHM *	00/00/00
ACT	R12009	-.--	4702-0472-003	RES, 5, 1/4W, 4.7K OHM	00/00/00
ACT	R12010	-.--	0002-0000-000	*** REF DESIG NOT USED ***	00/00/00

ASSY NO.	REVISION	DESCRIPTION	LAST ECN	DATE INC
7010-8831-000	A	PCB ASSY, PROCESSOR		10/30/71

STAT	REF.DES.	QTY	COMP. PART NO.	DESCRIPTION	EFFECTIVE
ACT	R12011	4.00	4702-0102-003	RES, 5, 1/4W, 1.0K OHM	00/00/00
ACT	R12012	-.--	0002-0000-000	*** REF DESIG NOT USED ***	00/00/00
ACT	R12013	-.--	0002-0000-000	*** REF DESIG NOT USED ***	00/00/00
ACT	R12014	-.--	0002-0000-000	*** REF DESIG NOT USED ***	00/00/00
ACT	R12015	1.00	4702-0271-003	RES, 5, 1/4W, 270 OHM	00/00/00
ACT	R12016	1.00	4706-7680-001	RES, 1, 1/4W, 768 OHM	00/00/00
ACT	R12017	1.00	4706-8060-001	RES, 1, 1/4W, 806 OHM *	00/00/00
ACT	R12018	1.00	4702-0821-003	RES, 5, 1/4W, 820 OHM	00/00/00
ACT	R12019	2.00	4701-0102-003	RES, 5, 1/8W, 1.0K OHM	00/00/00
ACT	R12020	-.--	0002-0000-000	*** REF DESIG NOT USED ***	00/00/00
ACT	R12021	1.00	4702-0332-003	RES, 5, 1/4W, 3.3K OHM	00/00/00
ACT	R12022	-.--	4702-0102-003	RES, 5, 1/4W, 1.0K OHM	00/00/00
ACT	R12023	-.--	4702-0102-003	RES, 5, 1/4W, 1.0K OHM	00/00/00
ACT	R12024	-.--	4702-0102-003	RES, 5, 1/4W, 1.0K OHM	00/00/00
ACT	R12025	1.00	4702-0272-003	RES, 5%, 1/4W 2.7K OHM *	00/00/00
ACT	R12026	-.--	4701-0102-003	RES, 5, 1/8W, 1.0K OHM	00/00/00
ACT	RN12001	4.00	4690-0912-300	RES NET,SIP,BUSS, 12K OHM,10-P	00/00/00
ACT	RN12002	-.--	4690-0912-300	RES NET,SIP,BUSS, 12K OHM,10-P	00/00/00
ACT	RN12003	-.--	4690-0912-300	RES NET,SIP,BUSS, 12K OHM,10-P	00/00/00
ACT	RN12004	-.--	4690-0912-300	RES NET,SIP,BUSS, 12K OHM,10-P	00/00/00
ACT	U12001	1.00	3135-0000-068	IC,80188,8/16-B CPU,PLCC	00/00/00
ACT	U12002	2.00	3271-0007-000	IC, 27C512 CMOS EPROM	00/00/00
ACT	U12003	1.00	3260-0100-700	IC,CMOS,RAM 32X8 5857 (256)	00/00/00
ACT	U12004	2.00	3211-3373-000	IC,74LS373,8X 3ST XPARENT LTCH	00/00/00
ACT	U12005	1.00	3135-0000-067	IC,8256,MUART	00/00/00
ACT	U12006	3.00	3214-8245-000	IC,74HCT245,OCTAL BUS XCVR	00/00/00

ASSY NO.	REVISION	DESCRIPTION	LAST ECN	DATE INC
7010-8831-000	A	PCB ASSY, PROCESSOR		10/30/71

STAT	REF.DES.	QTY	COMP. PART NO.	DESCRIPTION	EFFECTIVE
ACT	U12007	1.00	3223-0005-000	IC,MAX232EPC,5V 2X RS-232 XCVR	00/00/00
ACT	U12008	1.00	3131-0000-045	IC,74LS138,3-TO-8 DCDR/MPLXR	00/00/00
ACT	U12009	-.--	3271-0007-000	IC, 27C512 CMOS EPROM	00/00/00
ACT	U12010	1.00	3131-0000-038	IC,74LS74A,DUAL D FLIP-FLOP	00/00/00
ACT	U12011	1.00	3228-0008-000	IC,540/145040,A-D PERIPHERAL	00/00/00
ACT	U12012	-.--	3211-3373-000	IC,74LS373,8X 3ST XPARENT LTCH	00/00/00
ACT	U12013	-.--	3214-8245-000	IC,74HCT245,OCTAL BUS XCVR	00/00/00
ACT	U12014	2.00	3131-0000-007	IC,74LS125A,QUAD BUS BUFFER	00/00/00
ACT	U12015	1.00	3131-0000-033	IC,74LS04,HEX INVERTER	00/00/00
ACT	U12016	-.--	3131-0000-007	IC,74LS125A,QUAD BUS BUFFER	00/00/00
ACT	U12017	1.00	3131-0000-032	IC,74LS02,QUAD 2-INPUT NOR	00/00/00
ACT	U12018	3.00	3211-3244-000	IC,74LS244,OCTAL BUF/DRVR/RCVR	87/04/27
ACT	U12019	-.--	3211-3244-000	IC,74LS244,OCTAL BUF/DRVR/RCVR	87/04/27
ACT	U12020	-.--	3211-3244-000	IC,74LS244,OCTAL BUF/DRVR/RCVR	87/04/27
ACT	U12021	-.--	3214-8245-000	IC,74HCT245,OCTAL BUS XCVR	00/00/00
ACT	U12022	1.00	3135-0000-069	IC,7705,+5V SPLY VOLTAGE SUPV	00/00/[illegible]
ACT	XU12001	1.00	3101-0000-031	SOCKET,68-P LCC JEDEC H/P TIN	00/0[illegible]
ACT	XU12002	3.00	3101-0000-029	SOCKET,28-P DIP,GOLD,LO PROFIL	00/00/[illegible]
ACT	XU12003	-.--	3101-0000-029	SOCKET,28-P DIP,GOLD,LO PROFIL	00/0[illegible]
ACT	XU12009	-.--	3101-0000-029	SOCKET,28-P DIP,GOLD,LO PROFIL	00/0[illegible]
ACT	Y12001	1.00	2363-0113-000	XTAL, 16.384000MHZ,F P,HC-18/U	00/0[illegible]

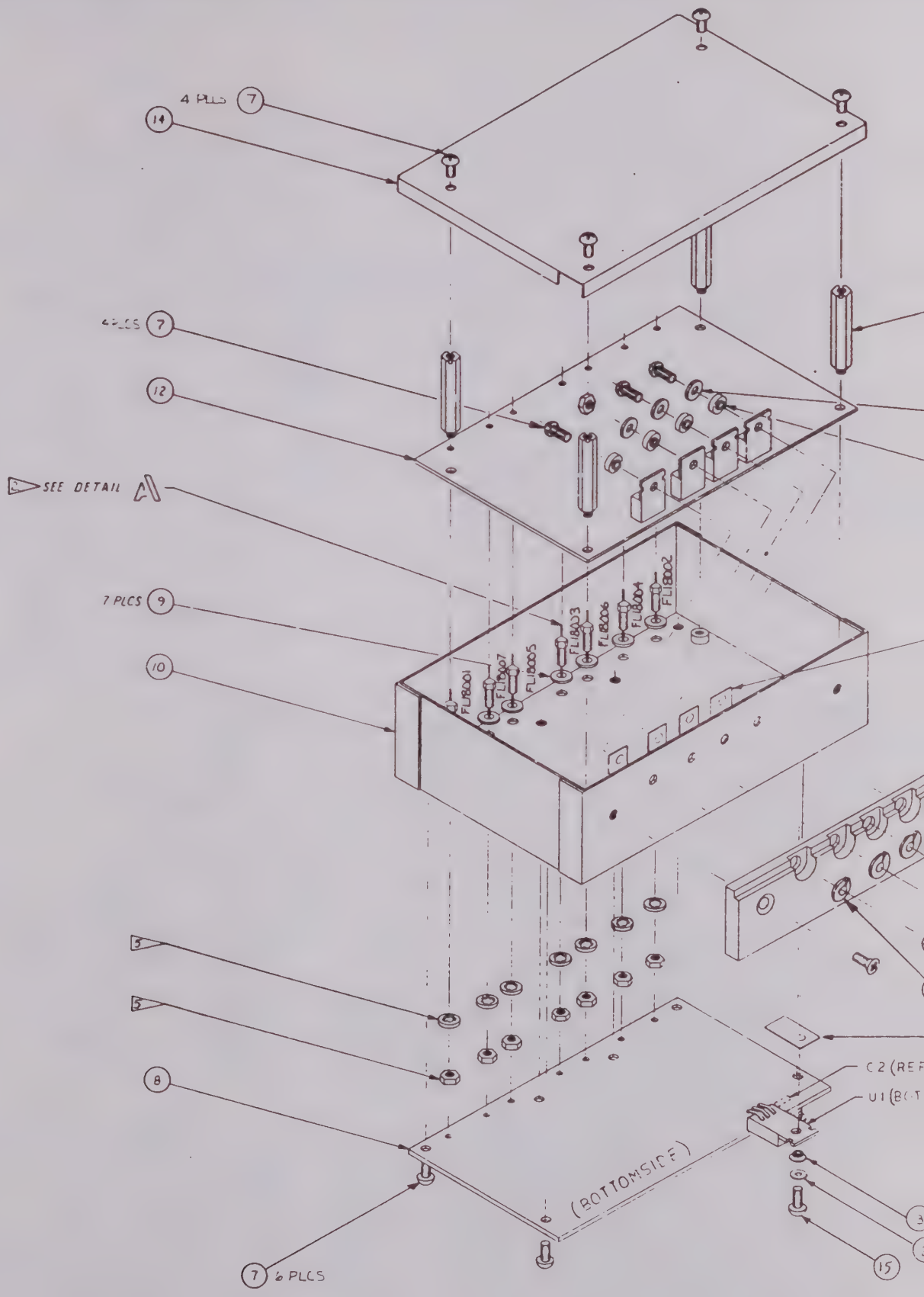
4 PLCS
7
14
4 PLCS
7
12
SEE DETAIL A
7 PLCS
9
10
FLI8001
FLI8007
FLI8005
FLI8003
FLI8006
FLI8004
FLI8002
5
5
8
7
6 PLCS
(BOTTOMSIDE)
C2 (REF
U1 (BOT
3
15

DATE	REV	CHANGE	APP'D
3-29-88	A	DESIGN RELEASE, REF NO 615 REPRODUCED, WAS 7005-6740-700 JS	CJKM
7-29-88	A	PROD REL PER ECN 11475 JR	SLR
8-30-88	A-1	INC RC13580	[illegible]
[illegible]	A-2	INC 14227 BP	BP

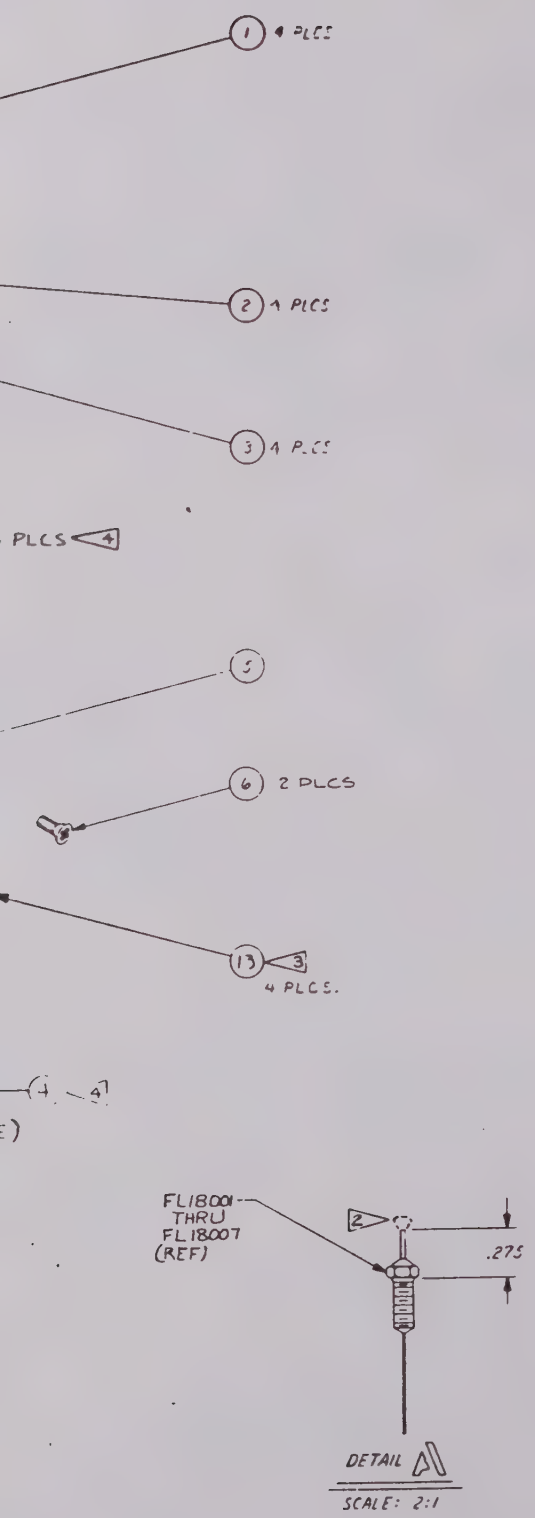

NOTES:

1. THIS ASSEMBLY CARRIES SERIES 18000 (e.g., R1 IS R18001).

2. FLANGE OF FL18001-7 ARE TO BE REMOVED BEFORE INSTALLATION.

3. USE LOCKTITE 222 (DPN 1050-0000-047) ON CONNECTION AFTER NUT, ITEM 13, IS TIGHTENED.

4. APPLY SILICON GREASE TO BOTH SIDES OF MICA INSULATOR AND BETWEEN HEATSINK AND ENCLOSURE.

5. HARDWARE TO BE INCLUDED WITH FL18001-7 (DPN 5801-0000-006)

6. REF SCHEM 0000-6840-100

IFR SYSTEMS INC

DRAWN DH	DATE 5/22/87	TITLE MECH ASS'Y, POWER SUPPLY
CHECKED R Dow	DATE 3-30-88	
APPROVED [illegible]	DATE	SIZE D — DWG NO. 7005-6840-100 — REV A-2
		SCALE OR AS NOTED 1:1 — DO NOT SCALE THIS DRAWING — FSCM CODE 57180 — SHEET 1 OF 1

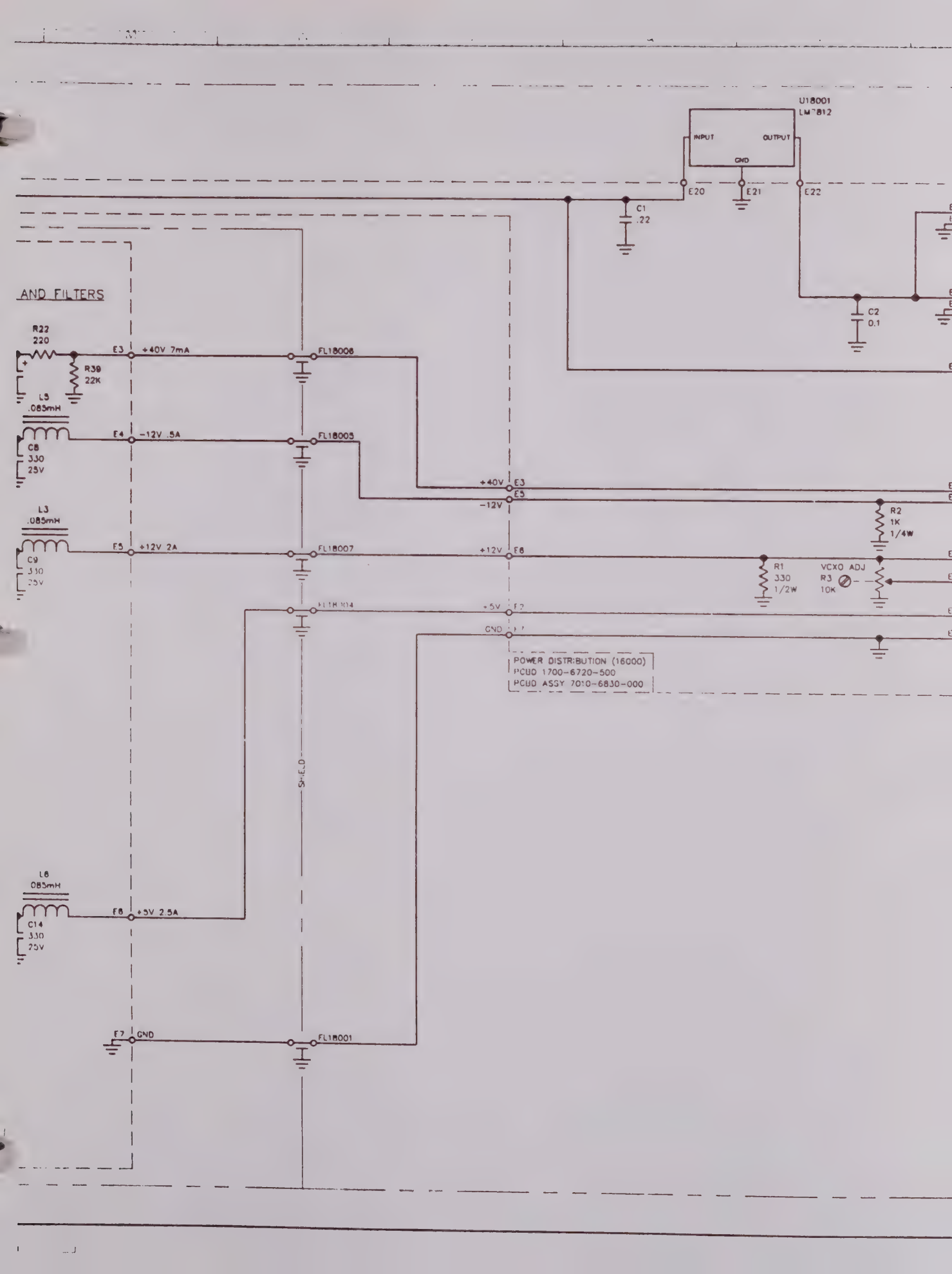
U18001
LM7812
INPUT
OUTPUT
GND
E20
E21
E22
C1
.22
C2
0.1
AND FILTERS
R22
220
R39
22K
L5
.085mH
C8
330
25V
E3
+40V 7mA
FL18006
E4
-12V .5A
FL18005
L3
.085mH
C9
330
25V
E5
+12V 2A
FL18007
L6
.085mH
C14
330
25V
E6
+5V 2.5A
E7
GND
FL18001
+40V
E3
-12V
E5
+12V
E8
+5V
GND
R2
1K
1/4W
R1
330
1/2W
VCXO ADJ
R3
10K
SHIELD
POWER DISTRIBUTION (16000)
PCUD 1700-6720-500
PCUD ASSY 7010-6830-000

DATE	REV	CHANGE	APVD
8/15/90	A1	FOR PREVIOS HISTORY SEE SHEET ONE OF 7005-6840-100 INCORPORATED RC #13580	RGC

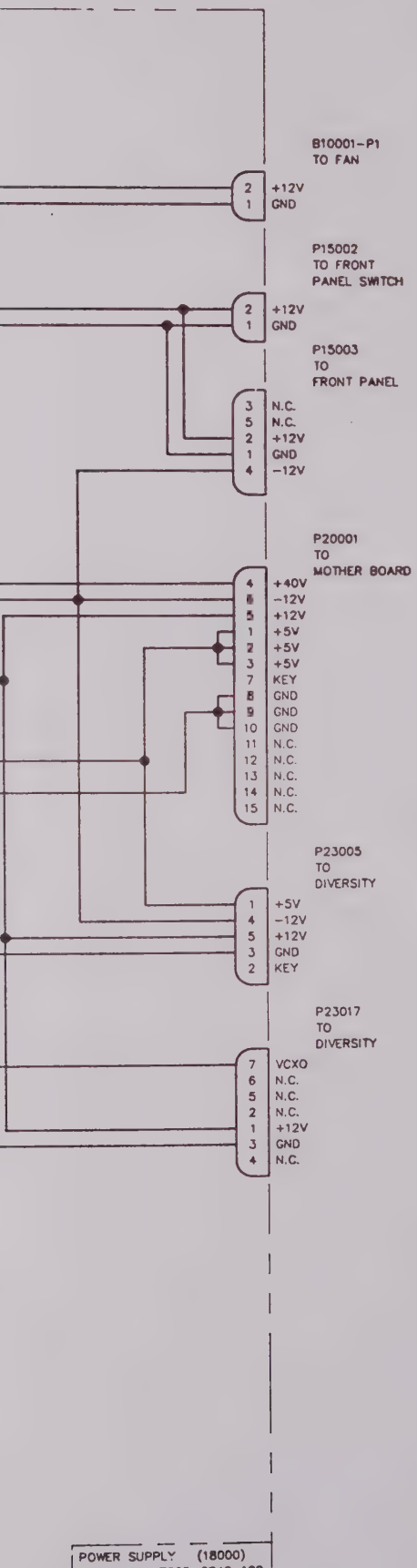

STANDARDS:
(UNLESS OTHERWISE NOTED)

1. ALL REFERENCE NUMBERS CARRY AN ASSIGNED DESIGNATOR SERIES.
   THIS SCHEMATIC CARRIES SERIES:
   7005-6840-100 SERIES 18000 REV A
   7010-6730-700 SERIES 17000 REV B1
   7010-6830-000 SERIES 16000 REV B2
2. ALL RESISTORS ARE 1/4 W, 5 % TOLERANCE.
3. ALL RESISTANCE IS EXPRESSED IN OHMS
4. ALL CAPACITANCE IS EXPRESSED IN MICRO FARADS.

NOTES:
(UNLESS OTHERWISE NOTED)

1. LAST REFERENCE NUMBERS USED.
   POWER SUPPLY MECH
   FL7, U1
   INVERTER SUPPLY
   C17, CR16, L7, Q10, R42, T1, U7
   POWER DISTRIBUTION
   C2, E23, R3, B10001-P1, P15003, P19001, P20001, P23017.
2. REFERENCE NUMBERS NOT USED.
   INVERTER SUPPLY
   CR7, L2, L4, R21, U4

POWER SUPPLY (18000)
MECH ASSY 7005-6840-100

DRAWN	J.MILLER	DATE	4-20-89
CHECKED	S.McELROY	DATE	5-5-88
APPROVED	P.HARRIS	DATE	5-5-88

IFR SYSTEMS INC
10200 West York St., Wichita, Kansas 67215

TITLE: POWER SUPPLY MECH SCHEMATIC

SIZE	DWG. NO.	REV
D	0000-6840-100	A1

SCALE: DO NOT SCALE | FSCM 51190 | SHEET 1 OF 2

ASSY NO.	REVISION	DESCRIPTION	LAST ECN	DATE INC
7005-6840-100	A1	MECH ASSY, POWER SUPPLY	13580	08/01/90

STAT	REF.DES.	QTY	COMP. PART NO.	DESCRIPTION	EFFECTIVE
ACT	*01	4.00	2800-5154-700	SPCR.25HEX,M-F,SLOT,1.06L*4-40	00/00/00
ACT	*02	5.00	2840-0000-009	WASHER,FLAT,4,MS15795-803	00/00/00
ACT	*03	5.00	2840-6153-500	WASHER PPS SHOULDER *	00/00/00
ACT	*04	5.00	4835-0000-103	INSUL,MICA,TO-220 TRANS,DF103B	00/00/00
ACT	*05	1.00	5400-6150-100	HEATSINK, PWR SUPPLY	00/00/00
ACT	*06	2.00	2803-0313-003	SCREW 4-40 X 5/16 PFHMS	00/00/00
ACT	*07	14.00	2803-0313-006	SCREW,4-40 X 5/16 PPHM	00/00/00
ACT	*08	1.00	7010-6830-000	PCB ASSY POWER DISTRIBUTION	00/00/00
ACT	*09	7.00	2840-0000-046	WASHER,FLT.166ID*.406OD*.037TK	00/00/00
ACT	*10	1.00	1415-6150-200	ENCLOSURE PWR SUPPLY	00/00/00
ACT	*11	4.00	2840-0000-012	4 SPLIT LOCKWASHER	00/00/00
ACT	*12	1.00	7010-6730-700	PCB ASSY, INVERTER SUPPLY	87/05/14
ACT	*13	4.00	2850-0000-020	NUT,HEX,SMALL PAT,4-40	00/00/00
ACT	*14	1.00	1414-6150-300	COVER, PWR SUPPLY	00/00/00
ACT	*15	1.00	2803-0188-006	SCREW,4-40 X 3/16 PPHM	00/00/00
ACT	FL18001	7.00	5801-0000-006	FILTER,EMI/RFI 1500pF 8-32DIA*	00/00/00
ACT	FL18002	-.--	5801-0000-006	FILTER,EMI/RFI 1500pF 8-32DIA*	00/00/00
ACT	FL18003	-.--	5801-0000-006	FILTER,EMI/RFI 1500pF 8-32DIA*	00/00/00
ACT	FL18004	-.--	5801-0000-006	FILTER,EMI/RFI 1500pF 8-32DIA*	00/00/00
ACT	FL18005	-.--	5801-0000-006	FILTER,EMI/RFI 1500pF 8-32DIA*	00/00/00
ACT	FL18006	-.--	5801-0000-006	FILTER,EMI/RFI 1500pF 8-32DIA*	00/00/00
ACT	FL18007	-.--	5801-0000-006	FILTER,EMI/RFI 1500pF 8-32DIA*	00/00/00
ACT	U18001	1.00	3224-0078-120	IC,7812C,1.5A 12V REGULATOR *	87/06/04

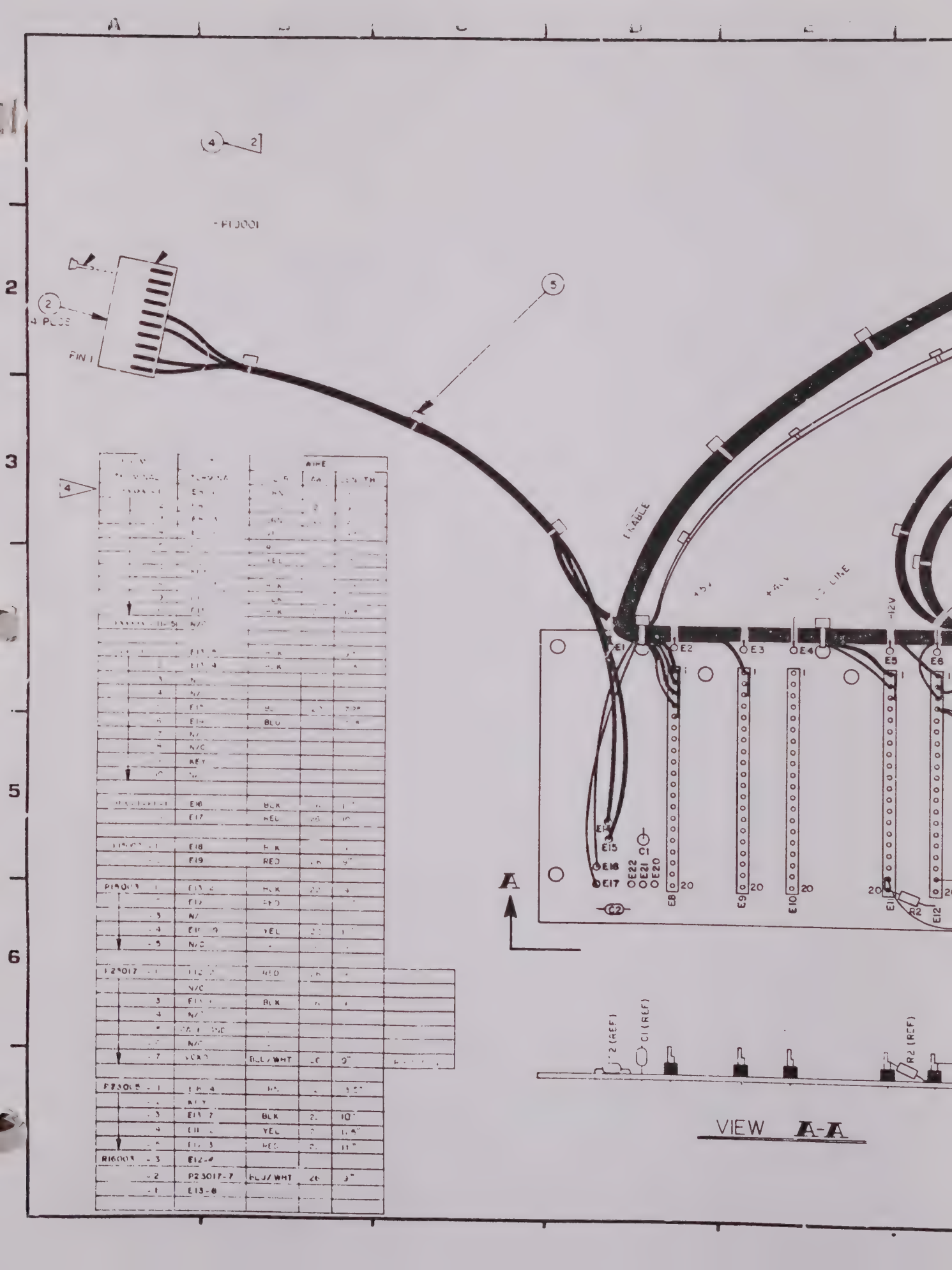
4 PLCS
PIN 1
ENABLE
+5V
+12V
-12V
E1
E2
E3
E4
E5
E6
E7
E8
E9
E10
E11
E12
E13
E14
E15
E16
E17
E18
E19
E20
E21
E22
C1
C2
R1
R2
A
VIEW A-A

DATE	REV	CHANGE	APVD
	B	DESIGN REL. REF # 631	
	B-1	REF # 673	CIKM
	B-2	REF # 693	
7-29 88	B-2	PROD REL PER ECN 11475 JR	

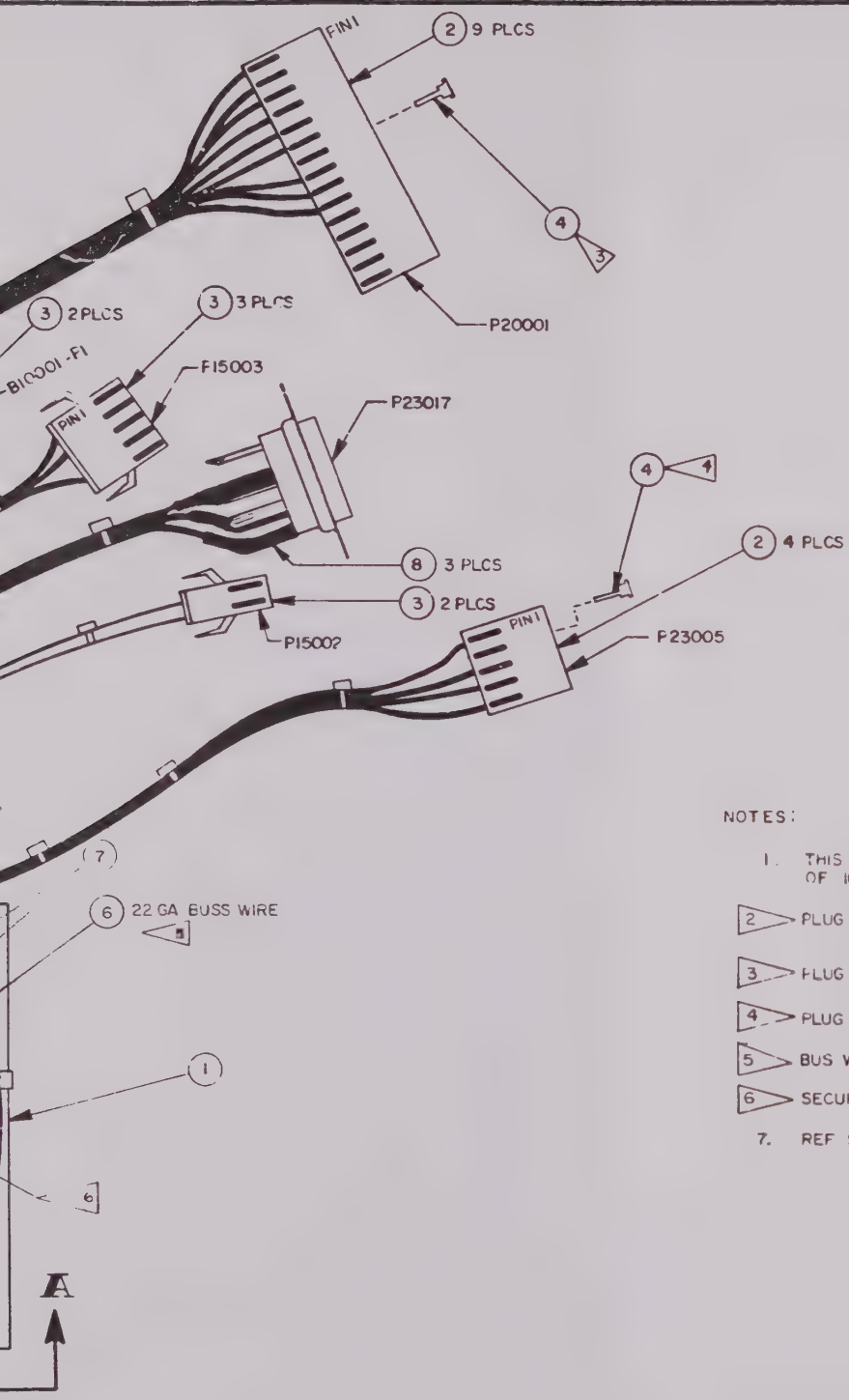

NOTES:

1. THIS PC BD ASS'Y CARRIES A REF DES SERIES OF 16000 (ie R1 IS R16001)

2 PLUG PIN 9 FOR KEYING

3 PLUG PIN 7 FOR KEYING.

4 PLUG PIN 2 FOR KEYING.

5 BUS WIRE IS A STRAIGHT CONTINUOUS PIECE (7 PLCS).

6 SECURE (R16003) WITH TAK PAK, DPN 1051-0100-100.

7. REF SCHEM ~~7005~~ 0000-6840-100.

TOLERANCES (UNLESS OTHERWISE SPECIFIED)

MATERIAL

FINISH

IFR SYSTEMS INC

DRAWN BURNETT DATE 5/9/88

CHECKED DATE

APPROVED DATE

TITLE PC BD ASS'Y POWER DISTRIBUTION

SIZE D DWG NO 7010-6830-000 REV B-2

SCALE 2:1 SHEET 1 OF 1

ASSY NO.	REVISION	DESCRIPTION	LAST ECN	DATE INC
7010-6830-000	B2	PCB ASSY POWER DISTRIBUTION	#693	05/23/88

STAT	REF.DES.	QTY	COMP. PART NO.	DESCRIPTION	EFFECTIVI
ACT		1.50	6001-5000-001	WIRE,HOOK,TFE,20GA, 7S,BLACK	87/01/27
ACT		1.20	6001-5000-007	WIRE,HOOK,TFE,20GA, 7S,BLUE	87/01/27
ACT		3.70	6002-0000-001	WIRE,HOOK,TFE,22GA, 7S,BLACK	87/04/24
ACT		1.70	6002-0000-003	WIRE,HOOK,TFE,22GA, 7S,RED	87/04/24
ACT		2.30	6002-0000-004	WIRE,HOOK,TFE,22GA, 7S,ORANGE	87/04/24
ACT		1.70	6002-0000-005	WIRE,HOOK,TFE,22GA, 7S,YELLOW	87/04/24
ACT		.80	6002-0000-008	WIRE,HOOK,TFE,22GA, 7S,VIOLET	87/04/24
ACT		2.40	6003-0000-001	WIRE,HOOK,TFE,26GA, 7S,BLACK	87/04/24
ACT		2.40	6003-0000-003	WIRE,HOOK,TFE,26GA, 7S,RED	87/01/27
ACT		.80	6003-0000-017	WIRE,HOOK,TFE,26GA, 7S,WHT/BLU	00/00/00
ACT	*01	1.00	1700-6720-500	PC BD,POWER DISTRIBUTION	00/00/00
ACT	*02	17.00	2114-0000-022	CONTACT,DCANT,CRIMP,22-30,TIN	87/05/14
ACT	*03	7.00	2114-9002-001	CONTACT SKT26-22GA.SHF001T855*	87/01/27
ACT	*04	3.00	2127-9900-100	KEY,POLARIZIN,MOLEX 15-04-9209	00/00/00
ACT	*05	18.00	6004-6005-400	TY-RAP,4.0 LG	87/06/15
ACT	*06	.00	1050-0000-073	WIRE,BUS,TINNED COPPER,22GA	00/00/00
ACT	*07	.30	6011-0027-001	TUBING,TF,22 AWG,NATURAL,TW	00/00/00
ACT	*08	.30	6010-0125-100	TUBING,HS, 1/8 ID,CLEAR	00/00/00
ACT	B10001-P1	2.00	2115-9002-002	CONN,RECT.098 PLUG2-P.SMP02VB*	00/00/00
ACT	C16001	1.00	1627-2240-450	CAP,uF .22, 50V *	87/06/04
ACT	C16002	1.00	1521-0000-008	CAP,UF .10 50V,DIP Z5U *	00/00/00
ACT	E16008	6.00	2155-1010-020	TERM STRIP,.100C,STR,20-P	00/00/00
ACT	E16009	-.--	2155-1010-020	TERM STRIP,.100C,STR,20-P	00/00/00
ACT	E16010	-.--	2155-1010-020	TERM STRIP,.100C,STR,20-P	00/00/00
ACT	E16011	-.--	2155-1010-020	TERM STRIP,.100C,STR,20-P	00/00/00
ACT	E16012	-.--	2155-1010-020	TERM STRIP,.100C,STR,20-P	00/00/00

ASSY NO.	REVISION	DESCRIPTION	LAST ECN	DATE INC
7010-6830-000	B2	PCB ASSY POWER DISTRIBUTION	#693	05/23/88

STAT	REF.DES.	QTY	COMP. PART NO.	DESCRIPTION	EFFECTIVE
ACT	E16013	-.--	2155-1010-020	TERM STRIP,.100C,STR,20-P	00/00/00
ACT	P15002	-.--	2115-9002-002	CONN,RECT.098 PLUG2-P.SMP02VB*	00/00/00
ACT	P15003	1.00	2115-0001-005	CONN,MOLEX 22-01-2051	00/00/00
ACT	P19001	1.00	2115-0000-013	CONN,C HSG,.100C,10-P	87/04/24
ACT	P23005	1.00	2115-9002-005	CONN,RECT.098 PLUG 5-P,SMP05VB	00/00/00
ACT	P23017	1.00	2125-0000-003	SOCKET,TUBE,MINI,7-P	00/00/00
ACT	PXXXXX	1.00	2115-0000-014	CONN PLASTIC MOLEX 22-01-2151	87/04/24
ACT	R16001	1.00	4703-0331-003	RES, 5, 1/2W, 330 OHM	87/05/14
ACT	R16002	1.00	4702-0102-003	RES, 5, 1/4W, 1.0K OHM	87/05/14
ACT	R16003	1.00	4756-3110-300	POT, 10K OHM, 3339W-1-103	00/00/00

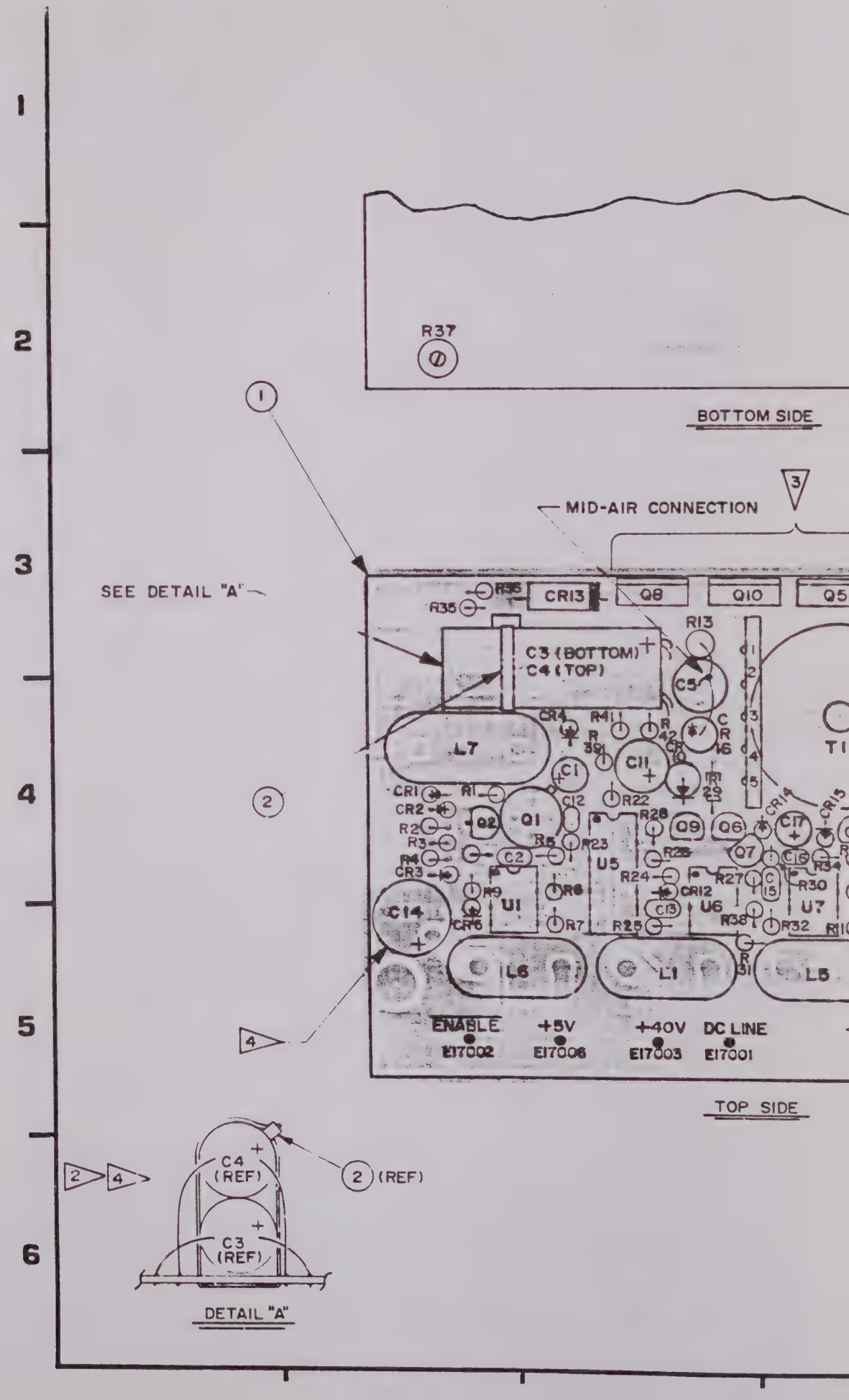

1
2
3
4
5
6
R37
BOTTOM SIDE
MID-AIR CONNECTION
SEE DETAIL "A"
CR13
Q8
Q10
Q5
R35
R36
R13
C3 (BOTTOM)
C4 (TOP)
C5
L7
CR4
R41
R42
R39
C11
C1
CR1
CR2
R1
Q2
Q1
C12
R22
R28
Q9
Q6
Q7
C17
C16
R2
R3
R4
CR3
C2
R5
R23
U5
R24
R27
R30
R34
R9
R6
U1
CR12
C13
U6
U7
C14
CR5
R7
R25
R38
R32
L6
L1
L5
ENABLE
E17002
+5V
E17006
+40V
E17003
DC LINE
E17001
TOP SIDE
C4 (REF)
C3 (REF)
2 (REF)
DETAIL "A"

6-16-87	B	DESIGN RELEASE	
8-4-87	B-1	REF #513	
11-13-87	B-1	PROD. RELEASE	
3-1-88	B-2	INC ECN 11486 JR	
10-27-88	B-3	INC RC11759 AO	
4-25-89	B-4	INC ECN 12345 AO	
12-15-89	C	INC ECN 12350 AO	
7-10-90	C-1	INC ECN 13572 AO	

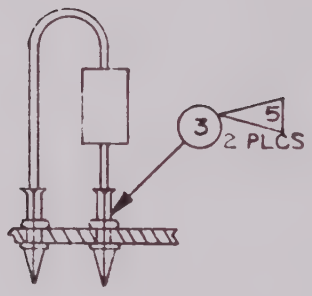

"DETAIL B"
NO SCALE

NOTES:

1. ALL REFERENCE DESIGNATORS CARRY AN ASSIGNED DESIGNATOR SERIES. THIS DRAWING CARRIES SERIES 17000 (eL R1 IS R17001).

2 > C4 IS INSTALLED ON TOP OF C3 THEN SECURED WITH ITEM 2 AS SHOWN.

3 > USE JIG TO INSERT Q5, Q8, Q10 & CR11

5 > ASSY PROCEDURES:
- A. INSERT ITEM 3 (6) PLCS. WHERE CR8, CR9, CR10 ARE TO BE INSTALLED.
- B. SOLDER TERMINALS (ITEM 3) INTO PLACE.
- C. INSERT CR8, CR9, & CR10 INTO TERMINALS & SOLDER.

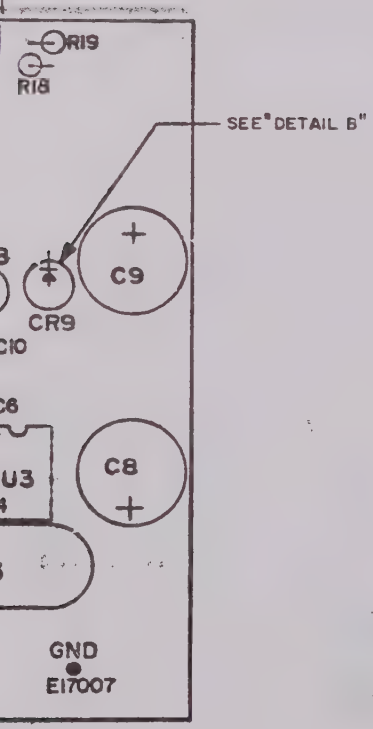

DRAWN	DATE	IFR SYSTEMS INC
SIGLER	5/28/87	TITLE: PCB ASS'Y, INVERTER SUPPLY
CHECKED	DATE	
APPROVED	DATE	SIZE C — DWG NO 7010-6730-700 — REV C-1
		SCALE OR AS NOTED 2:1 — DO NOT SCALE THIS DRAWING — FSCM CODE 81180 — SHEET 1 OF 2

ASSY NO.	REVISION	DESCRIPTION	LAST ECN	DATE INC
7010-6730-700	C1	PCB ASSY, INVERTER SUPPLY	13572	07/06/90

STAT	REF.DES.	QTY	COMP. PART NO.	DESCRIPTION		EFFECTIV
ACT	*01	1.00	1700-6720-700	PC BD,INVERTER SUPPLY		87/04/24
ACT	*02	1.00	6004-6005-550	TY-RAP,5.5 LG		00/00/00
ACT	*03	6.00	2813-0000-006	TERMINAL, TUBULAR PC MTG		00/00/00
ACT	C17001	2.00	1580-4700-216	CAP,UF 47, 16V, ELE RDL	*	00/00/00
ACT	C17002	1.00	1506-0272-017	CAP,pF 2700 100V NPO	*	00/00/00
ACT	C17003	2.00	1580-3310-360	CAP,UF 330, 35V,ELE,RDL		00/00/00
ACT	C17004	-.--	1580-3310-360	CAP,UF 330, 35V,ELE,RDL		00/00/00
ACT	C17005	1.00	1502-0334-012	CAP,UF, .33, 50V,MPC, 5	*	00/00/00
ACT	C17006	2.00	1506-0680-017	CAP,PF 68, 100V,NPO, 5		00/00/00
ACT	C17007	1.00	1506-0103-017	CAP, uF .010, 100V, NPO	*	00/00/00
ACT	C17008	3.00	1580-3310-025	CAP,uF 330, 25V ELE,RDL	*	00/00/00
ACT	C17009	-.--	1580-3310-025	CAP,uF 330, 25V ELE,RDL	*	00/00/00
ACT	C17010	1.00	1506-0182-017	CAP,PF 1800, 100V,NPO, 5		00/00/00
ACT	C17011	1.00	1580-1002-460	CAP, uF 10, 50V,ELE,RDL	*	00/00/00
ACT	C17012	1.00	1506-0221-017	CAP,pF 220, 100V,NPO, 5	*	00/00/00
ACT	C17013	1.00	1506-0152-017	CAP, pF 1500, 100V,NPO	*	00/00/00
ACT	C17014	-.--	1580-3310-025	CAP,uF 330, 25V ELE,RDL	*	00/00/00
ACT	C17015	1.00	1625-2230-100	CAP,UF .022 25V X7R, 5	*	00/00/00
ACT	C17016	-.--	1506-0680-017	CAP,PF 68, 100V,NPO, 5		00/00/00
ACT	C17017	-.--	1580-4700-216	CAP,UF 47, 16V, ELE RDL	*	00/00/00
ACT	CR17001	6.00	4815-0000-003	DIODE, 1N4148 ,SIGNAL, 75PRV		00/00/00
ACT	CR17002	-.--	4815-0000-003	DIODE, 1N4148 ,SIGNAL, 75PRV		00/00/00
ACT	CR17003	1.00	4816-0000-001	DIODE,5082-2800,S BAR, 70VBR		00/00/00
ACT	CR17004	1.00	4818-0000-001	DIODE, 1N5240B ,ZENER, 10V,.5W		00/00/00
ACT	CR17005	-.--	4815-0000-003	DIODE, 1N4148 ,SIGNAL, 75PRV		00/00/00
ACT	CR17006	1.00	4818-0000-015	DIODE,LM329C,6.9V ZENER REF	*	00/00/00

ASSY NO.	REVISION	DESCRIPTION	LAST ECN	DATE INC
7010-6730-700	C1	PCB ASSY, INVERTER SUPPLY	13572	07/06/90

STAT	REF.DES.	QTY	COMP. PART NO.	DESCRIPTION	EFFECTIV
ACT	CR17007	5.00	0002-0000-000	*** REF DESIG NOT USED ***	87/06/04
ACT	CR17008	3.00	4818-0000-018	DIODE 3A 200V FAST RECOVERY	00/00/00
ACT	CR17009	-.--	4818-0000-018	DIODE 3A 200V FAST RECOVERY	00/00/00
ACT	CR17010	-.--	4818-0000-018	DIODE 3A 200V FAST RECOVERY	00/00/00
ACT	CR17011	1.00	4822-6010-150	RECT,UES2403 ,F RCVY, 150V,16A	00/00/00
ACT	CR17012	-.--	4815-0000-003	DIODE, 1N4148 ,SIGNAL, 75PRV	00/00/00
ACT	CR17013	2.00	4920-5158-450	DIODE,80SQ045 ,RECT,PS,45V,8A	00/00/00
ACT	CR17014	-.--	4815-0000-003	DIODE, 1N4148 ,SIGNAL, 75PRV	00/00/00
ACT	CR17015	-.--	4815-0000-003	DIODE, 1N4148 ,SIGNAL, 75PRV	00/00/00
ACT	CR17016	-.--	4920-5158-450	DIODE,80SQ045 ,RECT,PS,45V,8A	00/00/00
ACT	L17001	4.00	1800-5354-900	IND,TOROID,30-T #20 MAGNET	00/00/00
ACT	L17002	-.--	0002-0000-000	*** REF DESIG NOT USED ***	87/06/04
ACT	L17003	-.--	1800-5354-900	IND,TOROID,30-T #20 MAGNET	00/00/00
ACT	L17004	-.--	0002-0000-000	*** REF DESIG NOT USED ***	87/06/04
ACT	L17005	-.--	1800-5354-900	IND,TOROID,30-T #20 MAGNET	00/00/00
ACT	L17006	-.--	1800-5354-900	IND,TOROID,30-T #20 MAGNET	00/00/00
ACT	L17007	1.00	1800-5061-400	INDUCTOR,TOROID 18GA 30 TURNS	00/00/00
ACT	Q17001	1.00	4801-0000-004	TRANS, 2N2905 ,PNP HS SW	00/00/00
ACT	Q17002	3.00	4801-0000-001	TRANSISTOR NPN HS SW *	00/00/00
ACT	Q17003	-.--	4801-0000-001	TRANSISTOR NPN HS SW *	00/00/00
ACT	Q17004	2.00	4805-0000-001	TRANS,2N2907A,PNP HS SW (3251)	00/00/00
ACT	Q17005	1.00	5050-2454-100	TRANS, N-CH MOSFET *	00/00/00
ACT	Q17006	-.--	4801-0000-001	TRANSISTOR NPN HS SW *	00/00/00
ACT	Q17007	-.--	4805-0000-001	TRANS,2N2907A,PNP HS SW (3251)	00/00/00
ACT	Q17008	2.00	5050-2952-100	TRANS,IRF-9521 P-CH MOSFET *	00/00/00
ACT	Q17009	1.00	4807-0000-001	TRANS, 2N3903 ,NPN HS SW	00/00/00

ASSY NO.	REVISION	DESCRIPTION	LAST ECN	DATE INC
7010-6730-700	C1	PCB ASSY, INVERTER SUPPLY	13572	07/06/90

STAT	REF.DES.	QTY	COMP. PART NO.	DESCRIPTION		EFFECTIVE
ACT	Q17010	-.--	5050-2952-100	TRANS,IRF-9521 P-CH MOSFET	*	00/00/00
ACT	R17001	4.00	4702-0270-003	RES, 5, 1/4W 27 OHM	*	00/00/00
ACT	R17002	1.00	4701-0472-003	RES, 5, 1/8W, 4.7K OHM		00/00/00
ACT	R17003	1.00	4701-0104-003	RES, 5, 1/8W, 100K OHM		00/00/00
ACT	R17004	3.00	4701-0102-003	RES, 5, 1/8W, 1.0K OHM		00/00/00
ACT	R17005	4.00	4701-0223-003	RES, 5, 1/8W, 22K OHM		00/00/00
ACT	R17006	2.00	4701-0103-003	RES, 5, 1/8W, 10K OHM	*	00/00/00
ACT	R17007	2.00	4701-0333-003	RES, 5, 1/8W, 33K OHM		00/00/00
ACT	R17008	4.00	4701-0153-003	RES, 5, 1/8W, 15K OHM		00/00/00
ACT	R17009	1.00	4701-0822-003	RES,5,1/8W 8.2K OHM	*	00/00/00
ACT	R17010	2.00	4701-0823-003	RES, 5, 1/8W, 82K OHM		00/00/00
ACT	R17011	-.--	4701-0153-003	RES, 5, 1/8W, 15K OHM		00/00/00
ACT	R17012	-.--	4702-0270-003	RES, 5, 1/4W 27 OHM	*	00/00/00
ACT	R17013	1.00	4703-0821-003	RES, 5%, 1/2W, 820 OHM	*	00/00/00
ACT	R17014	-.--	4701-0333-003	RES, 5, 1/8W, 33K OHM		00/00/00
ACT	R17015	-.--	4701-0103-003	RES, 5, 1/8W, 10K OHM	*	00/00/00
ACT	R17016	1.00	4701-0471-003	RES, 5, 1/8W, 470 OHM		00/00/00
ACT	R17017	2.00	4701-0332-003	RES, 5, 1/8W, 3.3K OHM	*	00/00/00
ACT	R17018	1.00	4706-8451-001	RES, 1, 1/4W, 8.45K OHM		00/00/00
ACT	R17019	1.00	4706-5761-001	RES, 1, 1/4W, 5.76K OHM		00/00/00
ACT	R17020	1.00	4752-0202-002	POT, 2K OHM		00/00/00
ACT	R17021	-.--	0002-0000-000	*** REF DESIG NOT USED ***		87/06/04
C1	R17022	1.00	4701-0221-003	RES, 5, 1/8W, 220 OHM		87/05/14
ACT	R17023	-.--	4701-0223-003	RES, 5, 1/8W, 22K OHM		00/00/00
ACT	R17024	-.--	4701-0153-003	RES, 5, 1/8W, 15K OHM		00/00/00
ACT	R17025	-.--	4701-0332-003	RES, 5, 1/8W, 3.3K OHM	*	00/00/00

NO.	REVISION	DESCRIPTION	LAST ECN	DATE INC
7010-6730-700	C1	PCB ASSY, INVERTER SUPPLY	13572	07/06/90

STAT	REF.DES.	QTY	COMP. PART NO.	DESCRIPTION			EFFECTIVE
ACT	R17026	-.--	4701-0823-003	RES, 5, 1/8W,	82K	OHM	00/00/00
ACT	R17027	-.--	4701-0102-003	RES, 5, 1/8W,	1.0K	OHM	00/00/00
ACT	R17028	1.00	4701-0470-003	RES, 5, 1/8W,	47	OHM	00/00/00
ACT	R17029	-.--	4701-0102-003	RES, 5, 1/8W,	1.0K	OHM	00/00/00
ACT	R17030	1.00	4701-0101-003	RES, 5, 1/8W,	100 OHM	*	00/00/00
ACT	R17031	-.--	4701-0153-003	RES, 5, 1/8W,	15K	OHM	00/00/00
ACT	R17032	-.--	4701-0223-003	RES, 5, 1/8W,	22K	OHM	00/00/00
ACT	R17033	1.00	4706-4991-001	RES, 1, 1/4W,	4.99K	OHM	00/00/00
ACT	R17034	1.00	4706-9091-001	RES, 1, 1/4W,	9.09K	OHM	00/00/00
ACT	R17035	1.00	4706-1001-001	RES, 1, 1/4W,	1.00K	OHM	00/00/00
ACT	R17036	1.00	4706-4751-001	RES, 1, 1/4W	4.75K OHM	*	00/00/00
ACT	R17037	1.00	4752-0103-002	POT 10K OHM			00/00/00
ACT	R17038	1.00	4701-0562-003	RES, 5, 1/8W,	5.6K	OHM	00/00/00
ACT	R17039	-.--	4701-0223-003	RES, 5, 1/8W,	22K	OHM	00/00/00
ACT	R17040	1.00	4701-0563-003	RES, 5, 1/8W	56K OHM	*	00/00/00
ACT	R17041	-.--	4702-0270-003	RES, 5, 1/4W	27 OHM	*	00/00/00
ACT	R17042	-.--	4702-0270-003	RES, 5, 1/4W	27 OHM	*	00/00/00
ACT	T17001	1.00	5604-5355-101	TRANSFORMER,INVERTER SUPPLY			00/00/00
ACT	U17001	5.00	3133-0000-024	IC,3130,BIMOS OP AMP,PLAST DIP			00/00/00
ACT	U17002	-.--	3133-0000-024	IC,3130,BIMOS OP AMP,PLAST DIP			00/00/00
ACT	U17003	-.--	3133-0000-024	IC,3130,BIMOS OP AMP,PLAST DIP			00/00/00
ACT	U17004	-.--	0002-0000-000	*** REF DESIG NOT USED ***			87/06/04
ACT	U17005	1.00	3133-0000-016	IC,4047B,ASTABLE MULTIVIBRATOR			00/00/00
ACT	U17006	-.--	3133-0000-024	IC,3130,BIMOS OP AMP,PLAST DIP			00/00/00
ACT	U17007	-.--	3133-0000-024	IC,3130,BIMOS OP AMP,PLAST DIP			00/00/00

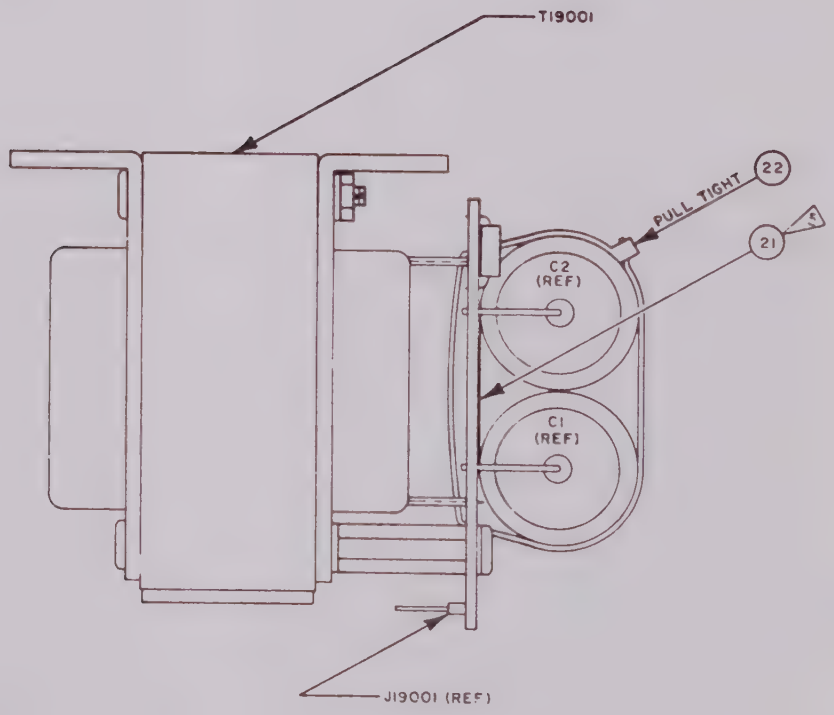

12 2 PLCS

13 2 PLCS

2

DATE	REV	CHANGE	APVD
[illegible]	A	DESIGN RELEASE	[illegible]
[illegible]	A-1	REF ● 513 S_S	[illegible]
[illegible]	A-1	[illegible]	[illegible]
[illegible]	A-2	INC ECN 10645 RB	[illegible]
[illegible]	A-3	[illegible]	[illegible]
[illegible]	A-4	INC RC 11497 JR	
[illegible]	A-5	INC RC13580	[illegible]

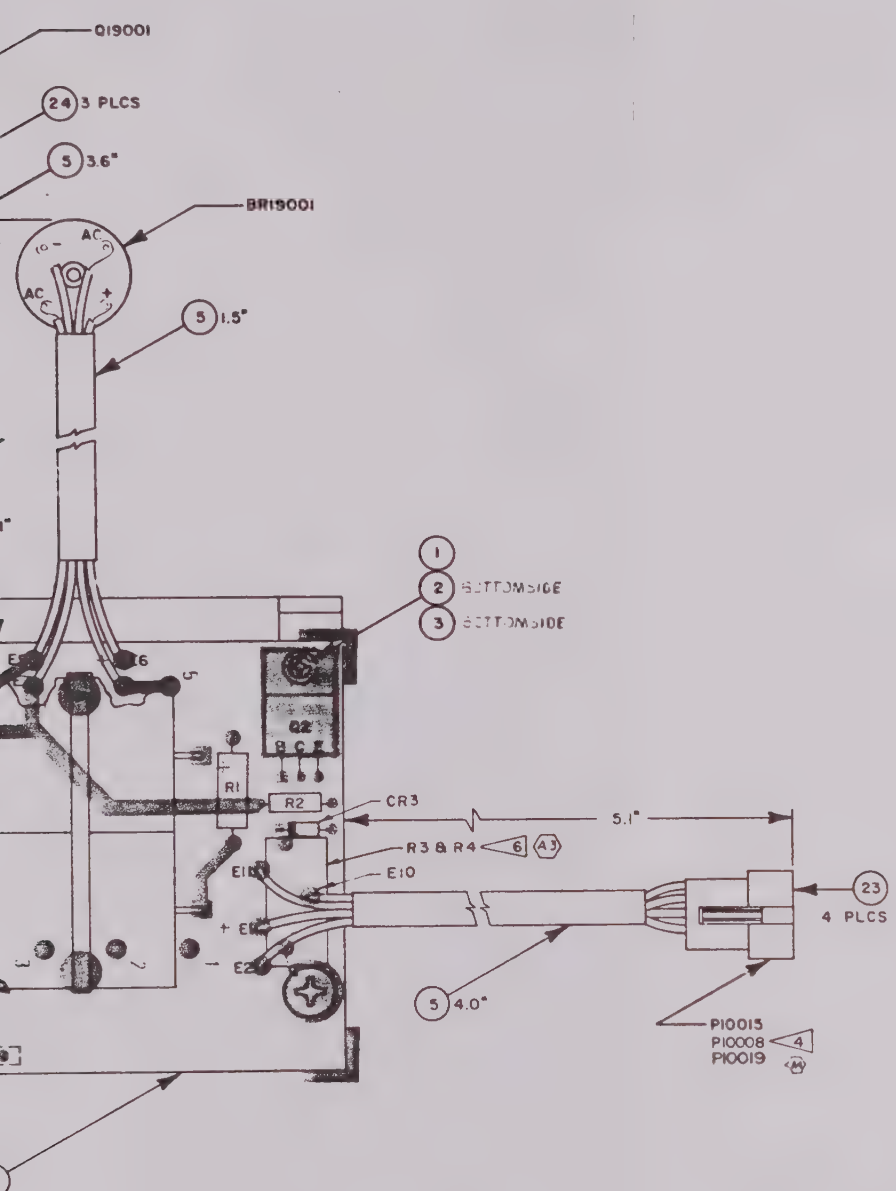

NOTES:

1. THIS PC BD ASSY CARRIES AN ASSIGNED REF DES SERIES OF 19000 (i.e., R1 IS R19001)
2. REMOVE PIN 9 FROM J19001 FOR KEYING
3. TRIM ALL LEADS MIN HEIGHT (.05 MAX)
4. P10015 APPLIES TO I-1402 ASSY
   P10008 APPLIES TO T-1401 ASSY
   P10019 APPLIES TO S-1403 ASSY (A4)
5. INSULATOR (ITEM 21) IS TO WRAP COMPLETELY AROUND C1 AND C2
6. KEEP LEADS OF R3 & R4 CLOSE TO BODIES OF RESISTORS TO AVOID SHORTING. SEE DETAIL "A".

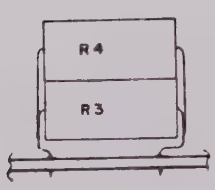

(A3) DETAIL "A"

IFR SYSTEMS INC

TITLE: PC BD ASSY LINE SUPPLY

SIZE: D | DWG NO: 7010-6730-800 | REV: A-5

SCALE: 2:1 | SHEET 1 OF 2

T DATE 03/01/91 BILL OF MATERIAL LISTED BY REF. DESIG. PAGE 1

NO.	REVISION	DESCRIPTION	LAST ECN	DATE INC
7010-6730-800	A5	PCB ASSY,LINE SUPPLY	13580	08/01/90

STAT	REF.DES.	QTY	COMP. PART NO.	DESCRIPTION	EFFECTIVI
		.63	6001-5000-001	WIRE,HOOK,TFE,20GA, 7S,BLACK	00/00/00
		.63	6001-5000-003	WIRE,HOOK,TFE,20GA, 7S,RED	00/00/00
		.25	6001-5000-004	WIRE,HOOK,TFE,20GA, 7S,ORANGE	00/00/00
		.63	6001-5000-006	WIRE,HOOK,TFE,20GA, 7S,GREEN	00/00/00
		.42	6002-0000-002	WIRE,HOOK,TFE,22GA, 7S,BROWN	00/00/00
		.42	6002-0000-006	WIRE,HOOK,TFE,22GA, 7S,GREEN	00/00/00
		.42	6002-0000-007	WIRE,HOOK,TFE,22GA, 7S,BLUE	00/00/00
		.42	6002-0000-010	WIRE,HOOK,TFE,22GA, 7S,WHITE	00/00/00
	*01	1.00	2803-0250-006	SCREW,4-40 X 1/4 PPHM	87/06/15
	*02	1.00	2850-0000-008	NUT,HEX,REG PAT,4-40	87/05/14
	*03	1.00	2840-0000-003	WASHER,LOCK,INT TOOTH,4	87/05/14
	*04	1.00	1700-6720-800	PC BD, LINE SUPPLY, 1402	87/06/15
	*05	1.10	6012-0166-100	TUBING,PVC-105, 6 AWG,CLEAR	87/05/14
	*12	2.00	2805-0250-006	SCREW 8-32X1/4 PBHMS	00/00/00
	*13	2.00	2840-0000-002	WASHER,LOCK,INT TOOTH,8	00/00/00
	*21	1.00	3107-5156-605	INSULATOR,LINE SUPPLY CAPS	87/05/14
	*22	1.00	6004-6005-800	TY-RAP,8.0 LG	00/00/00
	*23	4.00	2114-9001-001	CONTACT PIN26-22GA.SYM001T0.6*	00/00/00
	*24	.16	6010-0125-100	TUBING,HS, 1/8 ID,CLEAR	00/00/00
	BR19001	1.00	4823-0000-001	RECT,PK10 ,BRIDGE, 100V,10A	00/00/00
	C19001	2.00	1580-3322-210	CAP,UF 3300, 35V,ELE, 16	00/00/00
	C19002	-.--	1580-3322-210	CAP,UF 3300, 35V,ELE, 16	00/00/00
	CR19001	1.00	4815-0000-002	DIODE, 1N4004 ,RECT, 400V, 1A	00/00/00
	CR19002	1.00	0002-0000-000	*** REF DESIG NOT USED ***	00/00/00
	CR19003	1.00	4901-4752-100	DIODE, 1N4752A ,ZENER, 33V, 1W	00/00/00
	J19001	1.00	2115-0000-057	CONN,10-P STR KEYED HDR,GOLD	00/00/00

NO. 7010-6730-800 REVISION A5

DESCRIPTION PCB ASSY,LINE SUPPLY LAST ECN 13580 DATE INC 08/01/90

STAT	REF.DES.	QTY	COMP. PART NO.	DESCRIPTION	EFFECTIVE
	PXXXXX	1.00	2115-9001-005	CONN,RECT.098 RCPT 5-P,SMR05VB	00/00/00
	Q19001	1.00	4811-0000-005	TRANS 2N6488 NPN POWER	00/00/00
	Q19002	1.00	4822-0000-002	RECT,2N6397,THYR TO-220	87/05/14
ACT	R19001	1.00	4707-0250-002	RES, 5, 3W, 25 OHM WW	00/00/00
ACT	R19002	1.00	4702-0102-003	RES, 5, 1/4W, 1.0K OHM	87/05/14
ACT	R19003	2.00	4705-0129-002	RES, 5, 2W 1.2 OHM,WW	00/00/00
ACT	R19004	-.--	4705-0129-002	RES, 5, 2W 1.2 OHM,WW	00/00/00
ACT	T19001	1.00	5604-0000-013	XFMR, AC LINE 16V 2.5A	00/00/00

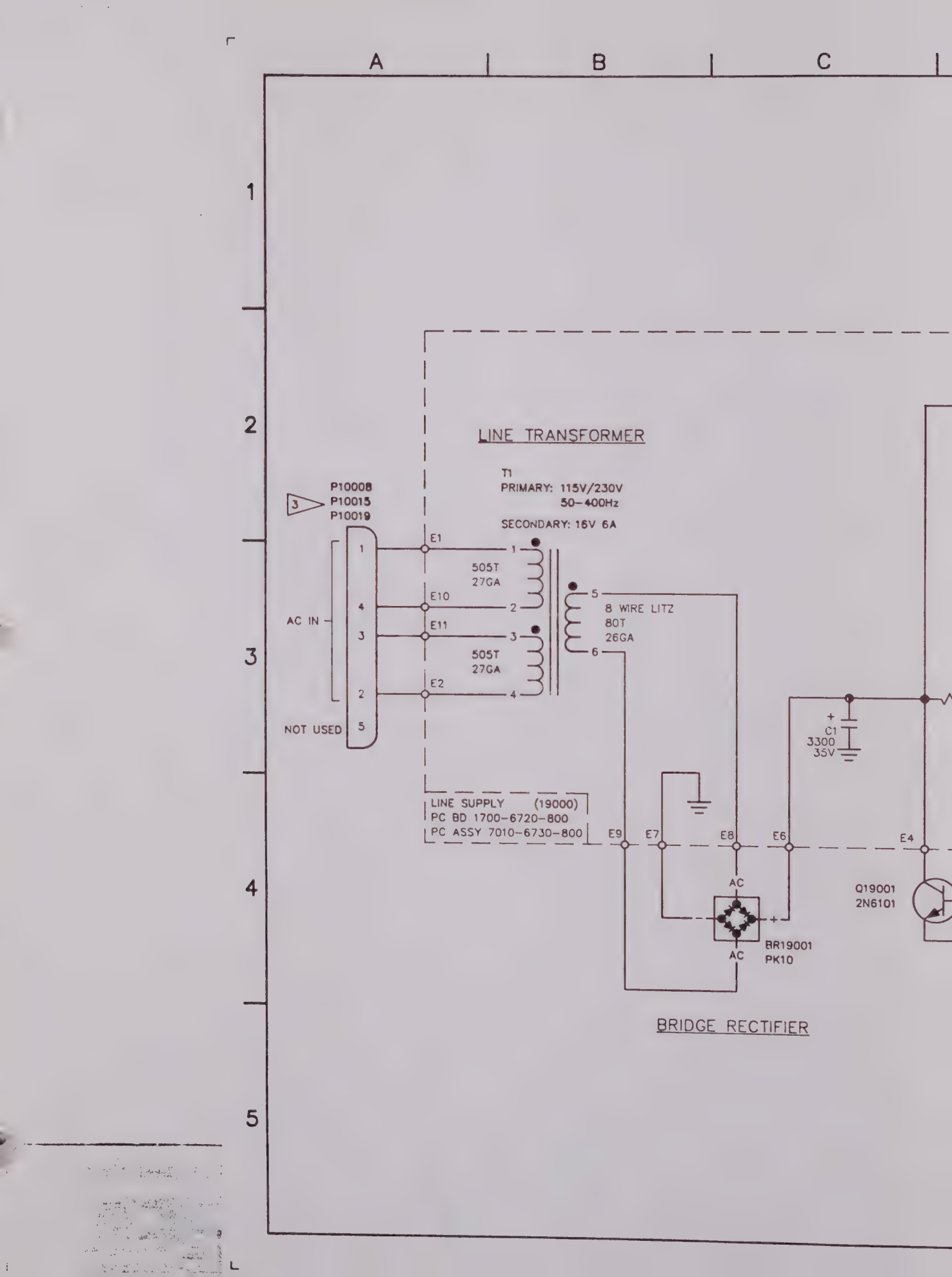
A
B
C
1
2
3
4
5
LINE TRANSFORMER
T1
PRIMARY: 115V/230V
50–400Hz
SECONDARY: 16V 6A
3
P10008
P10015
P10019
AC IN
NOT USED
E1
E10
E11
E2
505T
27GA
505T
27GA
8 WIRE LITZ
80T
26GA
C1
3300
35V
LINE SUPPLY (19000)
PC BD 1700-6720-800
PC ASSY 7010-6730-800
E9
E7
E8
E6
E4
AC
AC
BR19001
PK10
Q19001
2N6101
BRIDGE RECTIFIER

E F G

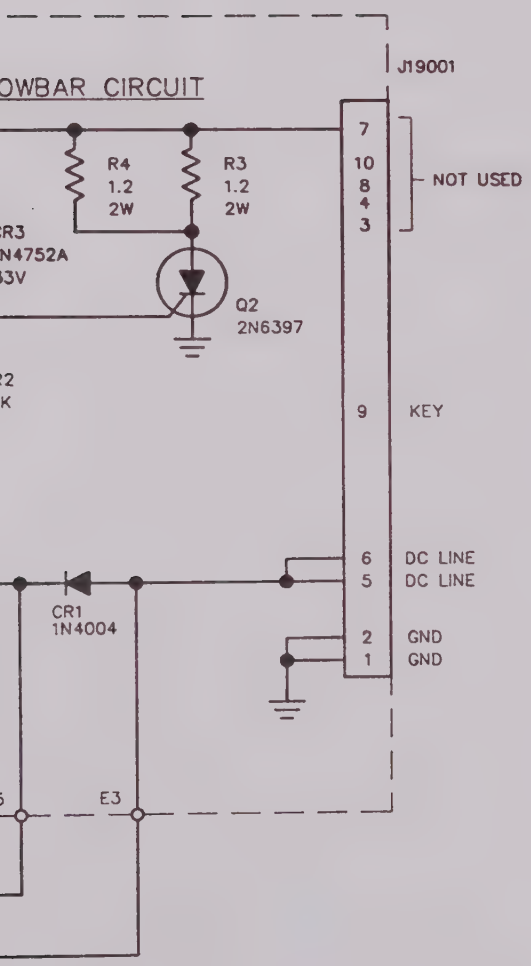

CIRCUIT

STANDARDS:
(UNLESS OTHERWISE NOTED)
1. ALL REF NOS CARRY AN ASSIGNED DESIGNATOR SERIES. THIS SCHEMATIC CARRIES SERIES: 19000.
2. ALL RESISTORS ARE 1/4W, 5 % TOLERANCE.
3. ALL RESISTANCE IS EXPRESSED IN OHMS.
4. ALL CAPACITANCE IS EXPRESSED IN MICRO FARADS.

NOTES:
(UNLESS OTHERWISE NOTED)
1. LAST REF NOS USED.
BR19001 C2 CR3 J19001 P10015 Q2 R4 T1

2. REF NOS NOT USED.
CR2

3 P10008 APPLIES TO T-1401 ASSY.
P10015 APPLIES TO I-1402 ASSY.
P10019 APPLIES TO S-1403 ASSY.

		IFR SYSTEMS INC 10200 West York St., Wichita, Kansas 67215
DRAWN SJA DATE 7/20/87	TITLE	CIRCUIT SCHEMATIC LINE SUPPLY
CHECKED S.McELROY 8-18-87 DATE		
APPROVED P.HARRIS 8-18-87 DATE	SIZE C	DWG. NO. 7010-6730-800 REV A5
	SCALE:	DO NOT SCALE FSCM 51190 SHEET 2 OF 2

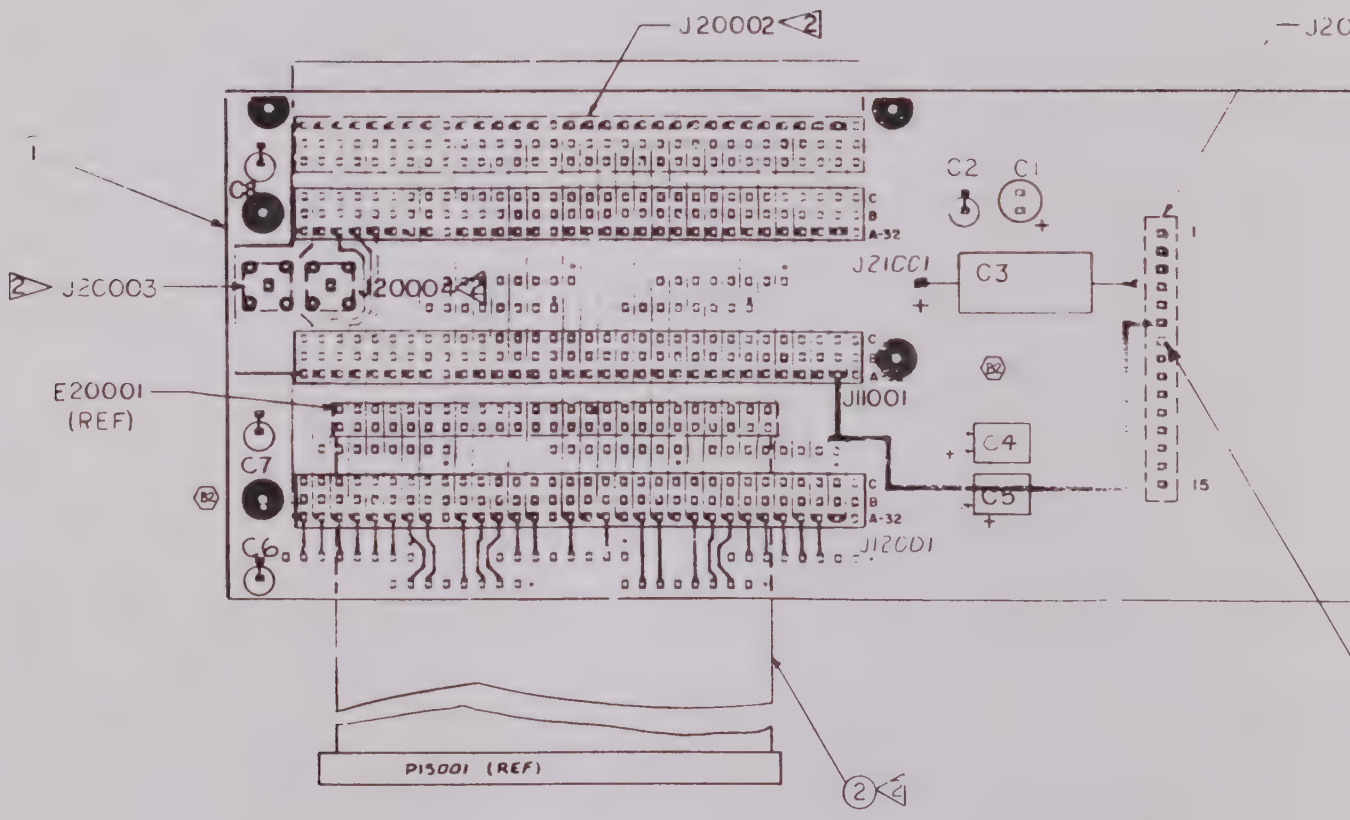
J20002
J20003
J20004
E20001
(REF)
C8
C7
C6
C2
C1
C3
C4
C5
J21001
J11001
J12001
A-32
15
P15001 (REF)

G H I J K

DATE	REV	CHANGE	APVD
9/14	A	DESIGN RELEASE	TE
9/14	A1	INC REF # 520	TE
12/3/87	A-2	INC REF #571	TE
[illegible]	B	UPDATE REV TO AGREE W/ PC BD	TE
3/30 88	B-1	INC REF Nº 643	TE
6-16 88	B-1	PROD REL PER ECN 1277 R	TE
8-15-8	B-2	INC ECN 1482 JR	EP

NOTES:

1. THIS ASSY CARRIES REF DES SERIES 20000, (ie C1 IS C20001)
2. J20001, J20002, J20003, J20004, AND ITEM 2, INSTALLED ON BOTTOMSIDE.
3. REMOVE PIN 7, J20001 FOR KEY.
4. (B2) FOR SCHEMATIC OF:
   J-1402 SEE 7010-6730-100
   S-1403 SEE 7010-6830-100

(B2)

T-1401

TOLERANCES: (UNLESS OTHERWISE SPECIFIED)

ALL DIMENSIONS APPLY AFTER FINISH

MATERIAL —

FINISH —

IFR SYSTEMS INC

DRAWN	Trueblood 8/11/87
CHECKED	C.N.D.S. 9-30-87
APPROVED	Trueblood 9-30-87

TITLE: PCB ASSY MOTHERBOARD

SIZE D | DWG NO 7010-7130-100 | REV B-2

SCALE 2:1 | DO NOT SCALE THIS DRAWING | FSCM CODE 51190 | SHEET 1 OF 3

PRINT DATE 91/06/19 BILL OF MATERIAL LISTED BY REF. DESIG. PAGE 1 STA

ASSY NO.	REVISION	DESCRIPTION	LAST ECN	DATE INC
7010-8831-100	B	PCB ASSY, MOTHERBOARD		10/30/71

STAT	REF.DES.	QTY	COMP. PART NO.	DESCRIPTION	EFFECTIVE
ACT		1.00	7010-7130-100	PCB ASSY,MOTHERBOARD	00/00/00

ASSY NO.	REVISION	DESCRIPTION	LAST ECN	DATE INC
7010-7130-100	B2	PCB ASSY,MOTHERBOARD	11482	08/10/88

STAT	REF.DES.	QTY	COMP. PART NO.	DESCRIPTION		EFFECTIVE
ACT	*01	1.00	1700-7120-100	PC BD,MOTHERBOARD		00/00/00
ACT	*02	1.00	6045-6782-200	RBN CA ASSY,MTHRBD-THUMBWHEEL		00/00/00
ACT	C1	1.00	1580-4700-216	CAP,UF 47, 16V, ELE RDL	*	00/00/00
ACT	C2	4.00	1521-0000-008	CAP,UF .10 50V,DIP Z5U	*	00/00/00
ACT	C3	1.00	1580-1000-365	CAP,UF 10, 250V,ELE, 50		00/00/00
ACT	C4	2.00	1580-2202-420	CAP, uF 22, 35V,ELE,RDL	*	00/00/00
ACT	C5	-.--	1580-2202-420	CAP, uF 22, 35V,ELE,RDL	*	00/00/00
ACT	C6	-.--	1521-0000-008	CAP,UF .10 50V,DIP Z5U	*	00/00/00
ACT	C7	-.--	1521-0000-008	CAP,UF .10 50V,DIP Z5U	*	00/00/00
ACT	C8	-.--	1521-0000-008	CAP,UF .10 50V,DIP Z5U	*	00/00/00
ACT	J11001	3.00	2129-1003-196	CONN,EURCON-C SKT.1X.196-P ST	*	00/00/00
ACT	J12001	-.--	2129-1003-196	CONN,EURCON-C SKT.1X.196-P ST	*	00/00/00
ACT	J20001	1.00	2129-1087-015	CONN,STR SINGLE ROW 1SP,PCB	*	00/00/00
ACT	J20002	1.00	2129-1004-196	CONN,EURCON-C SKT.1*.1*96P R/A		00/00/00
ACT	J20003	2.00	2200-2010-400	CONN,M SMB,PC MTG,STR,.453LG		00/00/00
ACT	J20004	-.--	2200-2010-400	CONN,M SMB,PC MTG,STR,.453LG		00/00/00
ACT	J21001	-.--	2129-1003-196	CONN,EURCON-C SKT.1X.196-P ST	*	00/00/00

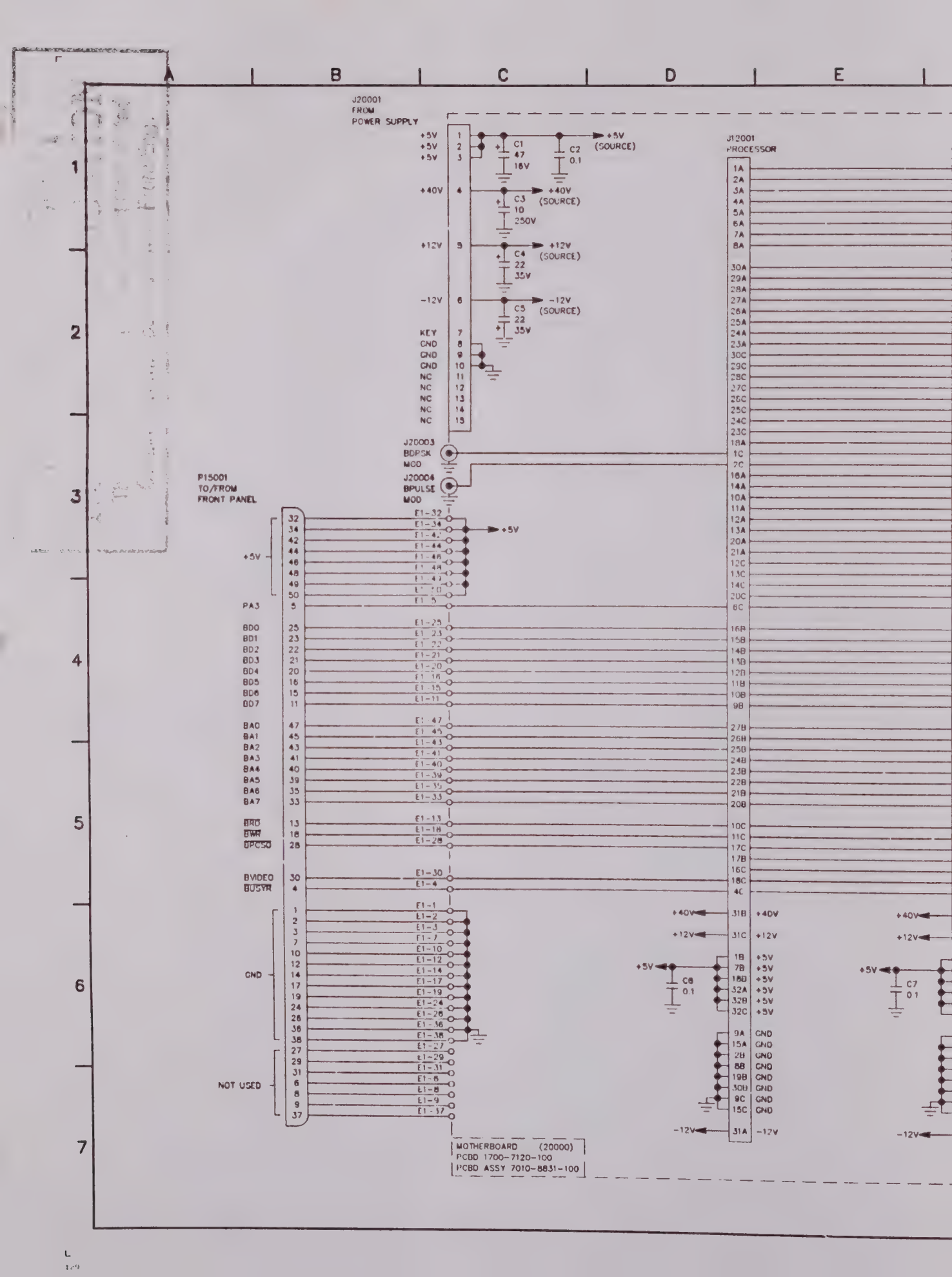
A
B
C
D
E
1
2
3
4
5
6
7
J20001
FROM
POWER SUPPLY
+5V
+5V
+5V
+40V
+12V
-12V
KEY
GND
GND
GND
NC
NC
NC
NC
NC
C1
47
16V
C2
0.1
+5V
(SOURCE)
C3
10
250V
+40V
(SOURCE)
C4
22
35V
+12V
(SOURCE)
C5
22
35V
-12V
(SOURCE)
J12001
PROCESSOR
J20003
BDPSK
MOD
J20004
BPULSE
MOD
P15001
TO/FROM
FRONT PANEL
+5V
PA3
BD0
BD1
BD2
BD3
BD4
BD5
BD6
BD7
BA0
BA1
BA2
BA3
BA4
BA5
BA6
BA7
BRD
BWR
UPCS0
BVIDEO
BUSYR
GND
NOT USED
C6
0.1
C7
0.1
+40V
+12V
-12V
MOTHERBOARD (20000)
PCBD 1700-7120-100
PCBD ASSY 7010-8831-100

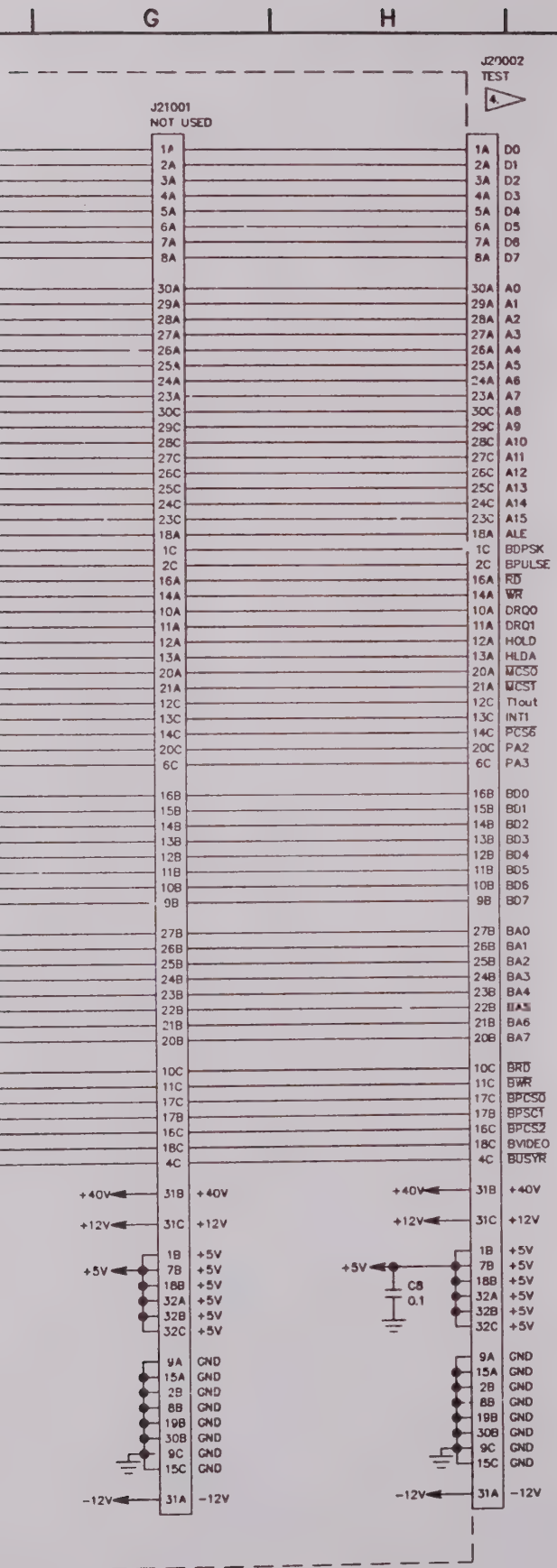

DATE	REV	CHANGE	APVD.
4-26-91	A	DESIGN RELEASE RGC	SL

STANDARDS:
(UNLESS OTHERWISE NOTED)
1. ALL REF NOS CARRY AN ASSIGNED DESIGNATOR SERIES. THIS SCHEMATIC CARRIES SERIES: 20000
2. ALL CAPACITANCE IS EXPRESSED IN MICRO FARADS.

NOTES:
(UNLESS OTHERWISE NOTED)
1. LAST REF NOS USED.
   C8, J12001, J11001, J20002, E1-50

2. REF NOS NOT USED.
   NONE

3. CONNECTOR PINS NOT USED.
   J12001, J11001, J20002
   PINS: 17A, 19A, 22A, 3B-6B, 28B, 29B, 3C, 5C, 7C, 8C, 19C, 21C, 22C, 31A.

4. J20002 SCHEMATIC PIN NUMBERS ARE RELATIVE TO THE PCBD'S IN A NORMAL OPERATING POSITION. THE CONNECTORS PIN NUMBER LABELS ARE A MIRROR IMAGE OF THE SCHEMATIC NUMBERS. THERFOR ROW A ON THE CONNECTOR IS ACTUALLY ROW C. ROW B REMAINS THE SAME.

5. FOR PCB ASSY DRAWING SEE 7010-7130-100 (T-1401 MOTHERBOARD)

DRAWN D.HAYNES	DATE 4-7-88	IFR SYSTEMS INC
CHECKED R.CRAWFORD	DATE 4-25-91	TITLE CIRCUIT SCHEMATIC S-1403C MOTHERBOARD
APPROVED E.R.HIXON	DATE 4-26-91	SIZE D · DWG. NO. 0000-8831-100 · REV B2
SCALE:	DO NOT SCALE	FSCM 51190 · SHEET 1 OF 1

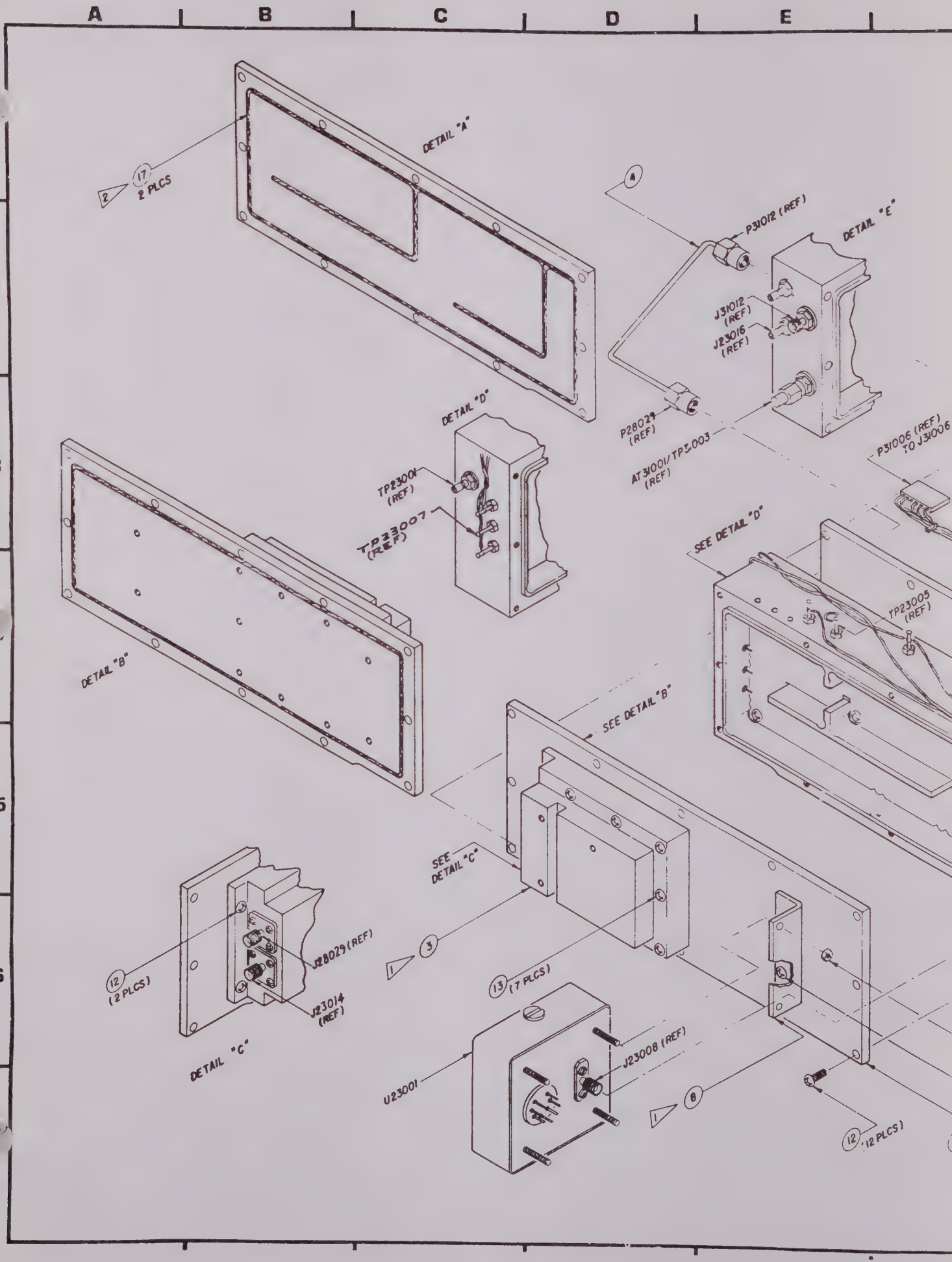
A
B
C
D
E
2
3
5
6
DETAIL "A"
17
2 PLCS
2
4
P31012 (REF)
DETAIL "E"
J31012 (REF)
J23016 (REF)
P28029 (REF)
AT31001/TP23003 (REF)
P31006 (REF) TO J31006
DETAIL "D"
TP23001 (REF)
TP23007 (REF)
SEE DETAIL "D"
TP23005 (REF)
DETAIL "B"
SEE DETAIL "B"
SEE DETAIL "C"
3
1
13
(7 PLCS)
12
(2 PLCS)
J28029 (REF)
J23014 (REF)
DETAIL "C"
U23001
J23008 (REF)
1
8
12
12 PLCS

DATE	REV	DESCRIPTION	APPD
5/30/91	A	DESIGN RELEASE	SL
7-1-91	A-1	INC REF ME L104	SL

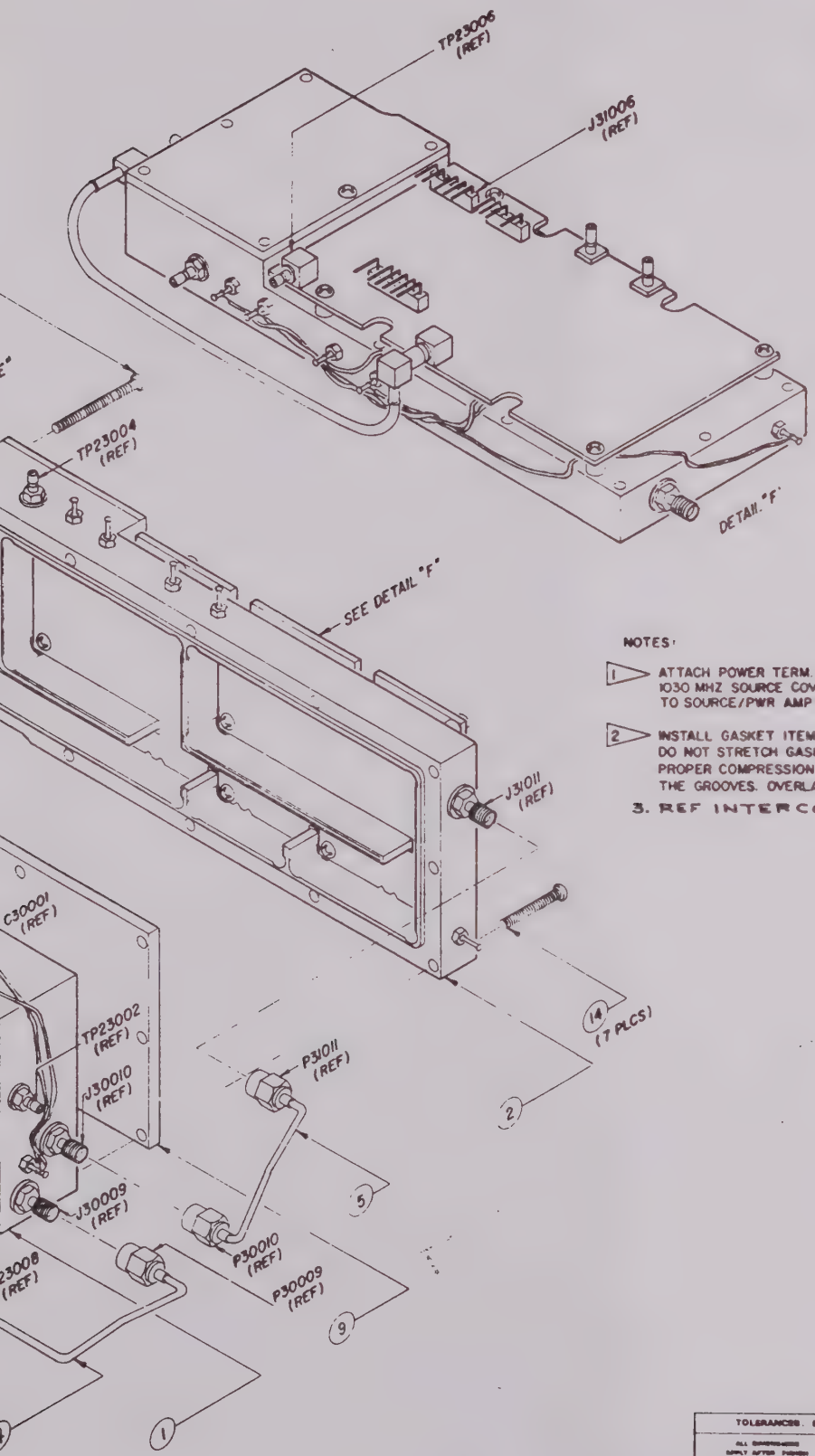

NOTES:

1. ATTACH POWER TERM. ITEM (3) AND TCXO BRACKET ITEM (8) TO 1030 MHZ SOURCE COVER ITEM (10) BEFORE ATTACHING COVER TO SOURCE/PWR AMP MECH ASSY ITEM (1)
2. INSTALL GASKET ITEM (17) 2 PLCS SEE DETAILS "A" AND "B". DO NOT STRETCH GASKET MATERIAL WHEN INSTALLING. FOR PROPER COMPRESSION BE SURE GASKET FITS COMPLETELY INTO THE GROOVES. OVERLAP ENDS AND PRESS TOGETHER SECURELY
3. REF INTERCONNECT 0000-8840-600.

TOLERANCES UNLESS OTHERWISE SPECIFIED

MATERIAL: NONE

FINISH: NONE

IFR SYSTEMS INC

SIGLER 4-17-90

TITLE: MECH ASSY, DIVERSITY S - 1403C

5/30/91

D | 7005-8840-600 | A-1

SCALE 1:1 | SIZE D | FSCM 57180 | SHEET 1 OF 1

ASSY NO.	REVISION	DESCRIPTION	LAST ECN	DATE INC
7005-8840-600	A	MECH ASSY, DIVERSITY		10/30/71

STAT	REF.DES.	QTY	COMP. PART NO.	DESCRIPTION	EFFECTIVE
ACT	*01	1.00	7005-8840-700	MECH ASSY,SOURCE/PWR AMP	00/00/00
ACT	*02	1.00	7005-8840-400	MECH ASSY, MODULATOR	00/00/00
ACT	*03	1.00	7005-8142-100	MECH ASSY, PWR TERMINATION	00/00/00
ACT	*04	2.00	6043-1150-450	COAX ASSY,SMA SMA CONFORMABLE	00/00/00
ACT	*05	1.00	6043-1150-350	COAX ASSY CONFRML MSMA/MSMA	00/00/00
ACT	*08	1.00	1400-6851-400	BRKT,TCXO MTG	00/00/00
ACT	*09	1.00	1414-6850-300	COVER,DIVERSITY PWR AMP ENCL.	00/00/00
ACT	*10	1.00	1414-6850-400	COVER, 1030MHZ SOURCE ENCL.	00/00/00
ACT	*11	2.00	2803-0188-006	SCREW,4-40 X 3/16 PPHM	00/00/00
ACT	*12	14.00	2803-0250-006	SCREW,4-40 X 1/4 PPHM	00/00/00
ACT	*13	7.00	2803-0625-006	SCREW,4-40 X 5/8 PPHM	00/00/00
ACT	*14	7.00	2803-0875-006	SCREW 4-40X7/8 PHIL BIND HD	00/00/00
ACT	*15	5.00	2803-1188-006	SCREW,4-40 X 1 3/16 PPHMS	00/00/00
ACT	*16	2.00	2850-0000-066	NUT,HEX,REG PAT,6-32	00/00/00
ACT	*17	3.20	6040-0010-012	CORD,SHLD,AL MESH,.062 DIA	00/00/00
ACT	U23001	1.00	5850-0000-012	OSC,TCXO 70D,10MHZ,+11V,-61DB	00/00/00

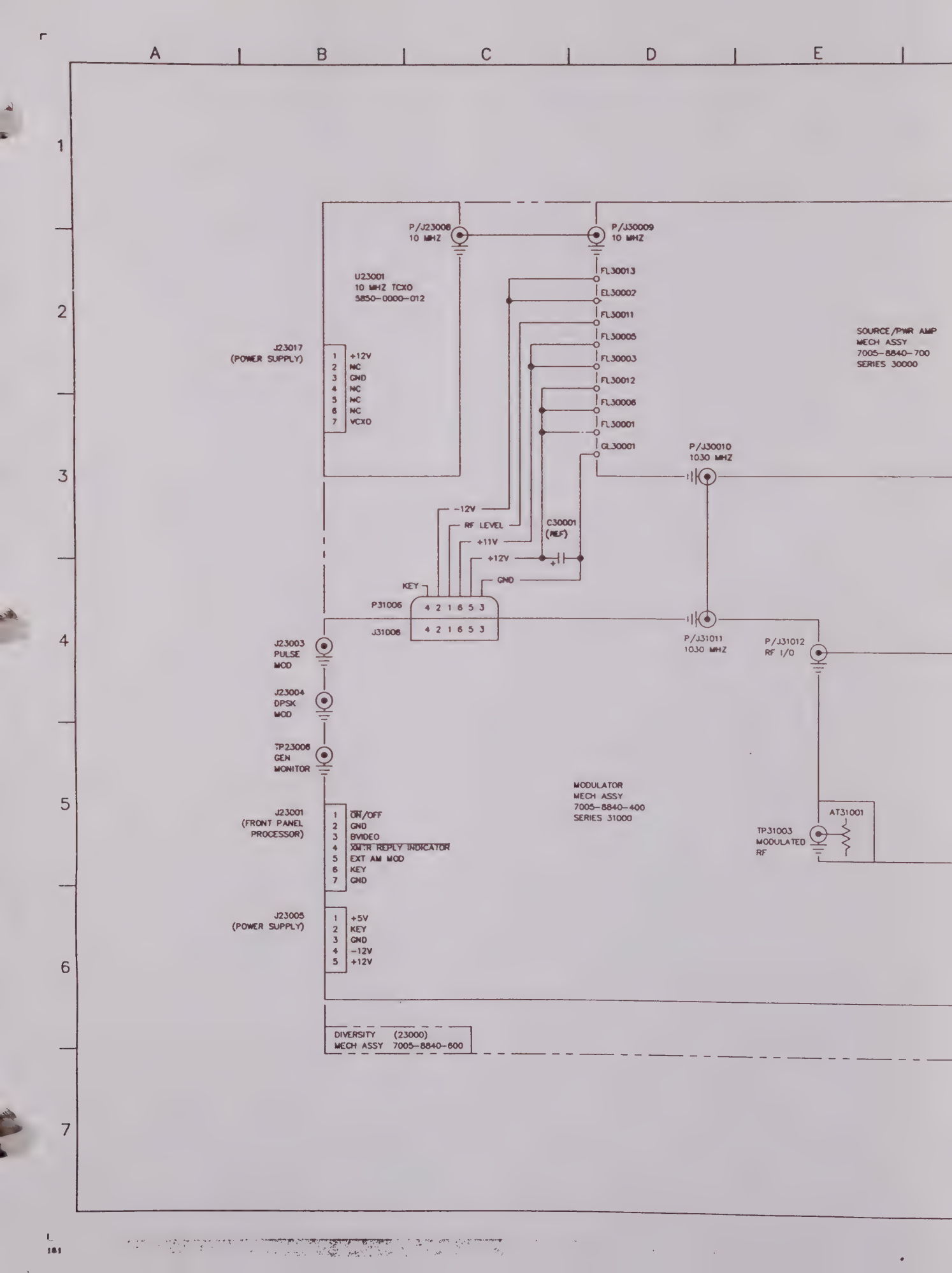
A
B
C
D
E
1
2
3
4
5
6
7
P/J23008
10 MHZ
P/J30009
10 MHZ
U23001
10 MHZ TCXO
5850-0000-012
FL30013
EL30002
FL30011
FL30005
FL30003
FL30012
FL30006
FL30001
GL30001
J23017
(POWER SUPPLY)
1 +12V
2 NC
3 GND
4 NC
5 NC
6 NC
7 VCXO
SOURCE/PWR AMP
MECH ASSY
7005-8840-700
SERIES 30000
P/J30010
1030 MHZ
-12V
RF LEVEL
+11V
+12V
GND
C30001
(REF)
KEY
P31006
4 2 1 6 5 3
J31006
4 2 1 6 5 3
P/J31011
1030 MHZ
P/J31012
RF I/O
J23003
PULSE
MOD
J23004
DPSK
MOD
TP23006
GEN
MONITOR
MODULATOR
MECH ASSY
7005-8840-400
SERIES 31000
AT31001
TP31003
MODULATED
RF
J23001
(FRONT PANEL
PROCESSOR)
1 ON/OFF
2 GND
3 BVIDEO
4 XMTR REPLY INDICATOR
5 EXT AM MOD
6 KEY
7 GND
J23005
(POWER SUPPLY)
1 +5V
2 KEY
3 GND
4 -12V
5 +12V
DIVERSITY (23000)
MECH ASSY 7005-8840-600

DATE	REV	CHANGE		APPR
6-24-91	A	DESIGN RELEASE	RGC	SL
7-1-91	A1	INC REF # L104		SL

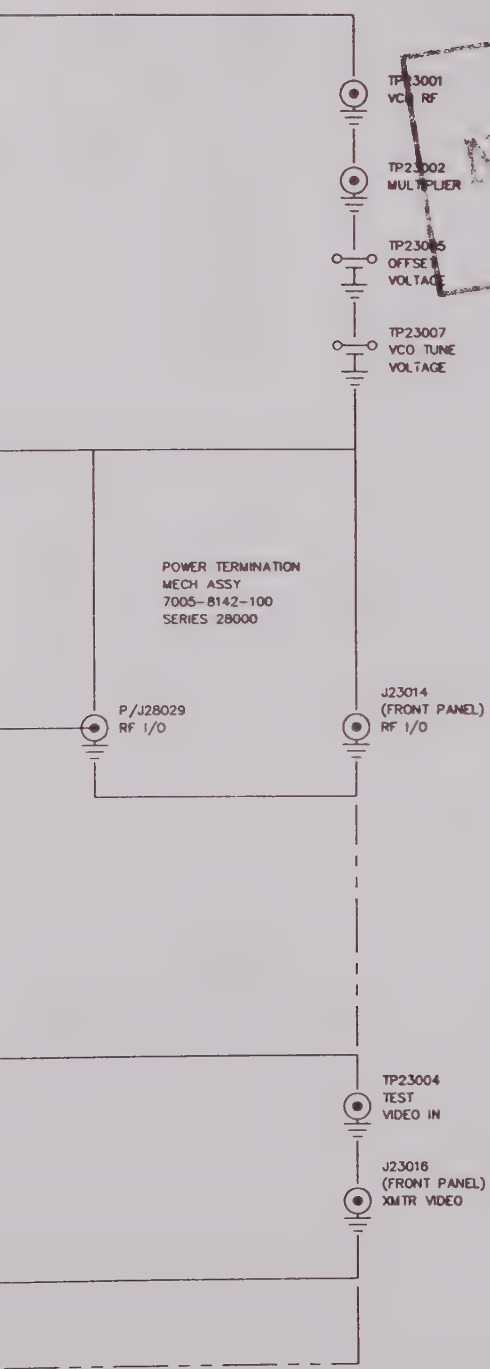

DRAWN D.HAYNES DATE 5/4/88	IFR SYSTEMS INC	
CHECKED R.CRAWFORD DATE 6-24-91	TITLE INTERCONNECT DIVERSITY MECH, S-1403C	
APPROVED P.R.HARRIS DATE 6-24-91	SIZE D DWG NO. 0000-8840-600	REV A1
	SCALE / DO NOT SCALE / FSCM 51190	SHEET 1 OF 1

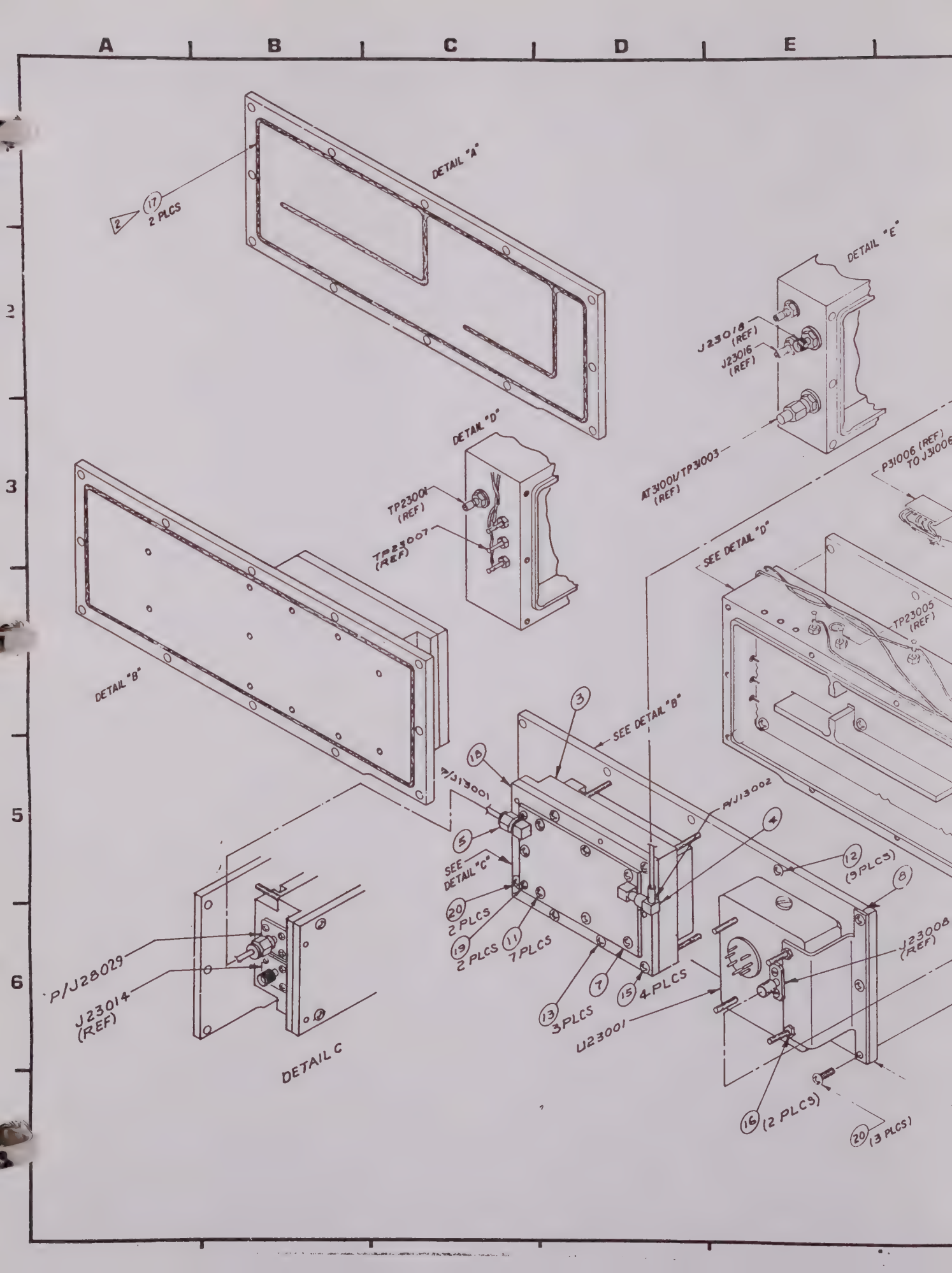
A
B
C
D
E
DETAIL "A"
17
2 PLCS
2
DETAIL "E"
J23018 (REF)
J23016 (REF)
AT31001/TP31003 (REF)
P31006 (REF) TO J31006
DETAIL "D"
TP23001 (REF)
TP23007 (REF)
SEE DETAIL "D"
TP23005 (REF)
DETAIL "B"
SEE DETAIL "B"
3
18
P/J13001
5
SEE DETAIL "C"
P/J13002
4
12 (3PLCS)
8
20 2 PLCS
19 2 PLCS
11 7PLCS
7
15 4PLCS
13 3PLCS
U23001
J23008 (REF)
P/J28029
J23014 (REF)
DETAIL C
16 (2 PLCS)
20 (3 PLCS)

DATE	REV	CHANGE	APP'D
5/21/91	A	DESIGN RELEASE	SL
7-1-91	A-1	INC REF No L104	SL

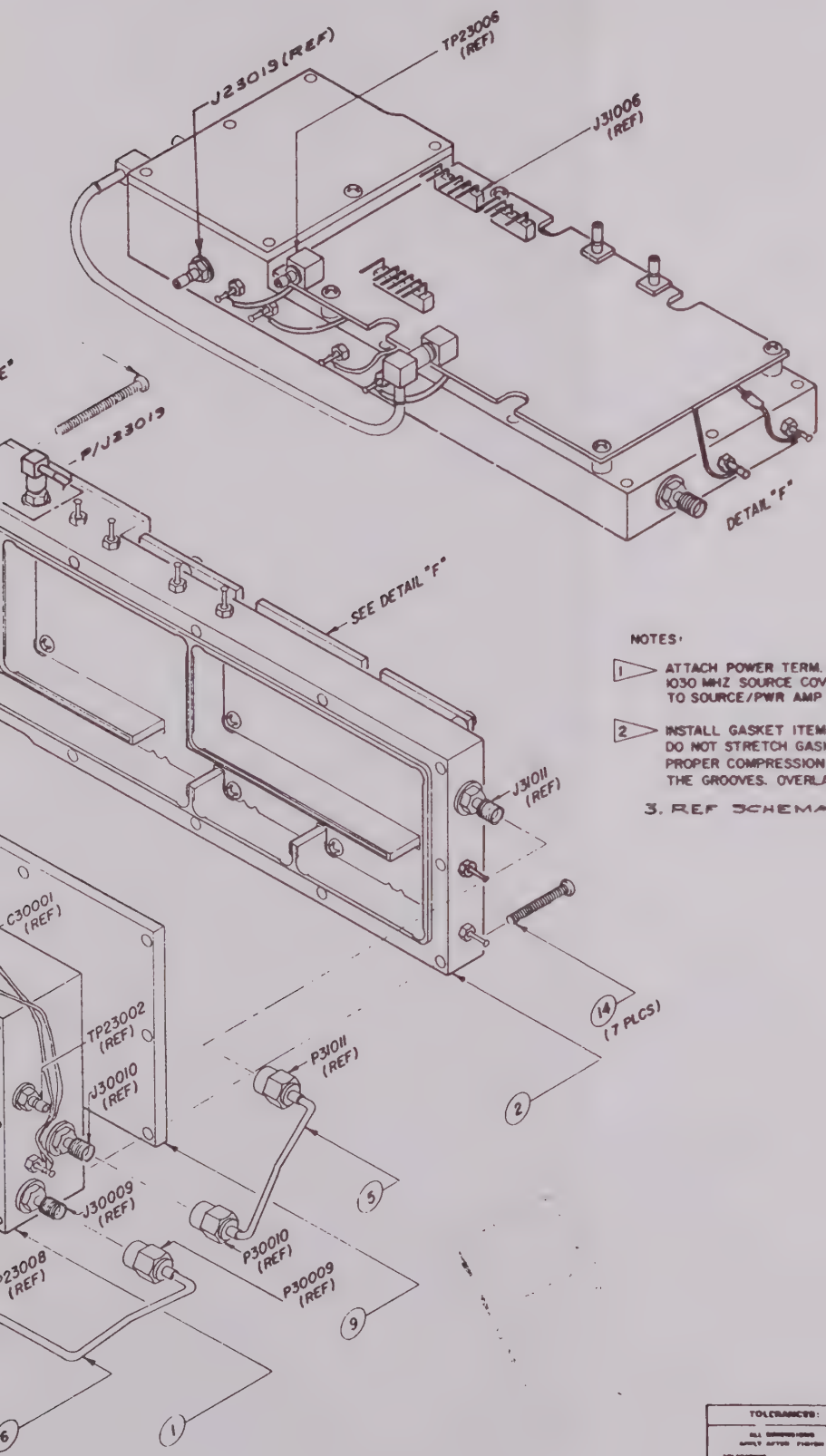

NOTES:

1. ATTACH POWER TERM. ITEM (3) AND TCXO BRACKET ITEM (8) TO 1030 MHZ SOURCE COVER ITEM (10) BEFORE ATTACHING COVER TO SOURCE/PWR AMP MECH ASSY ITEM (1)

2. INSTALL GASKET ITEM (17) 2 PLCS SEE DETAILS "A" AND "B". DO NOT STRETCH GASKET MATERIAL WHEN INSTALLING. FOR PROPER COMPRESSION BE SURE GASKET FITS COMPLETELY INTO THE GROOVES. OVERLAP ENDS AND PRESS TOGETHER SECURELY

3. REF SCHEMATIC 0000-8840-900

TOLERANCES: (UNLESS OTHERWISE SPECIFIED)

MATERIAL: NONE

FINISH: NONE

IFR SYSTEMS INC

DRAWN: A. OSBURN 2/10/91

CHECKED: ROOM CRAWFORD 5/16/91

APPROVED: E. RENA HIXON 5/21/91

TITLE: MECH ASSY, DIVERSITY W/MLD

SIZE: D | DWG NO: 7005-8840-900 | REV: A-1

SCALE: 1:1 | DO NOT SCALE THIS DRAWING | FROM CODE: STIED | SHEET 1 OF 1

ASSY NO.	REVISION	DESCRIPTION	LAST ECN	DATE INC
7005-8840-900	A	MECH ASSY,DIVERSITY W/MLD		10/30/71

STAT	REF.DES.	QTY	COMP. PART NO.	DESCRIPTION	EFFECTIVE
ACT	*01	1.00	7005-8840-700	MECH ASSY,SOURCE/PWR AMP	00/00/00
ACT	*02	1.00	7005-8840-800	MECH ASSY,MODULATOR W/MLD	00/00/00
ACT	*03	1.00	7005-8142-100	MECH ASSY, PWR TERMINATION	00/00/00
ACT	*04	1.00	6050-0040-500	COAX ASSY, 316,R F SMB/R F SMB	00/00/00
ACT	*05	2.00	6043-1150-350	COAX ASSY CONFRML MSMA/MSMA	00/00/00
ACT	*06	1.00	6043-1150-500	COAX CONF SMA STR-SMA STR	00/00/00
ACT	*07	1.00	7010-8830-500	PCB ASSY,VIDEO DETECTOR	00/0[illegible]
ACT	*08	1.00	1400-8850-700	BRACKET, TCXO MTG	00/0[illegible]
ACT	*09	1.00	1414-6850-300	COVER,DIVERSITY PWR AMP ENCL.	00/0[illegible]
ACT	*10	1.00	1414-6850-400	COVER, 1030MHZ SOURCE ENCL.	00/0[illegible]
ACT	*11	7.00	2803-0188-006	SCREW,4-40 X 3/16 PPHM	00/[illegible]
ACT	*12	9.00	2803-0250-006	SCREW,4-40 X 1/4 PPHM	00/0[illegible]
ACT	*13	3.00	2803-0625-006	SCREW,4-40 X 5/8 PPHM	00/0[illegible]
ACT	*14	7.00	2803-0875-006	SCREW 4-40X7/8 PHIL BIND HD	00/00/
ACT	*15	9.00	2803-1188-006	SCREW,4-40 X 1 3/16 PPHMS	00/00/00
ACT	*16	2.00	2850-0000-066	NUT,HEX,REG PAT,6-32	00/00/00
ACT	*17	3.20	6040-0010-012	CORD,SHLD,AL MESH,.062 DIA	00/00/00
ACT	*18	1.00	1414-8150-200	COVER,POWER TERM	00/00/00
ACT	*19	2.00	2801-0188-006	SCREW 2-56 X 3/16 PBHMS	00/00/00
ACT	*20	5.00	2803-0313-006	SCREW,4-40 X 5/16 PPHM	00/00/00
ACT	U23001	1.00	5850-0000-012	OSC,TCXO 70D,10MHZ,+11V,-61DB	00/00/00

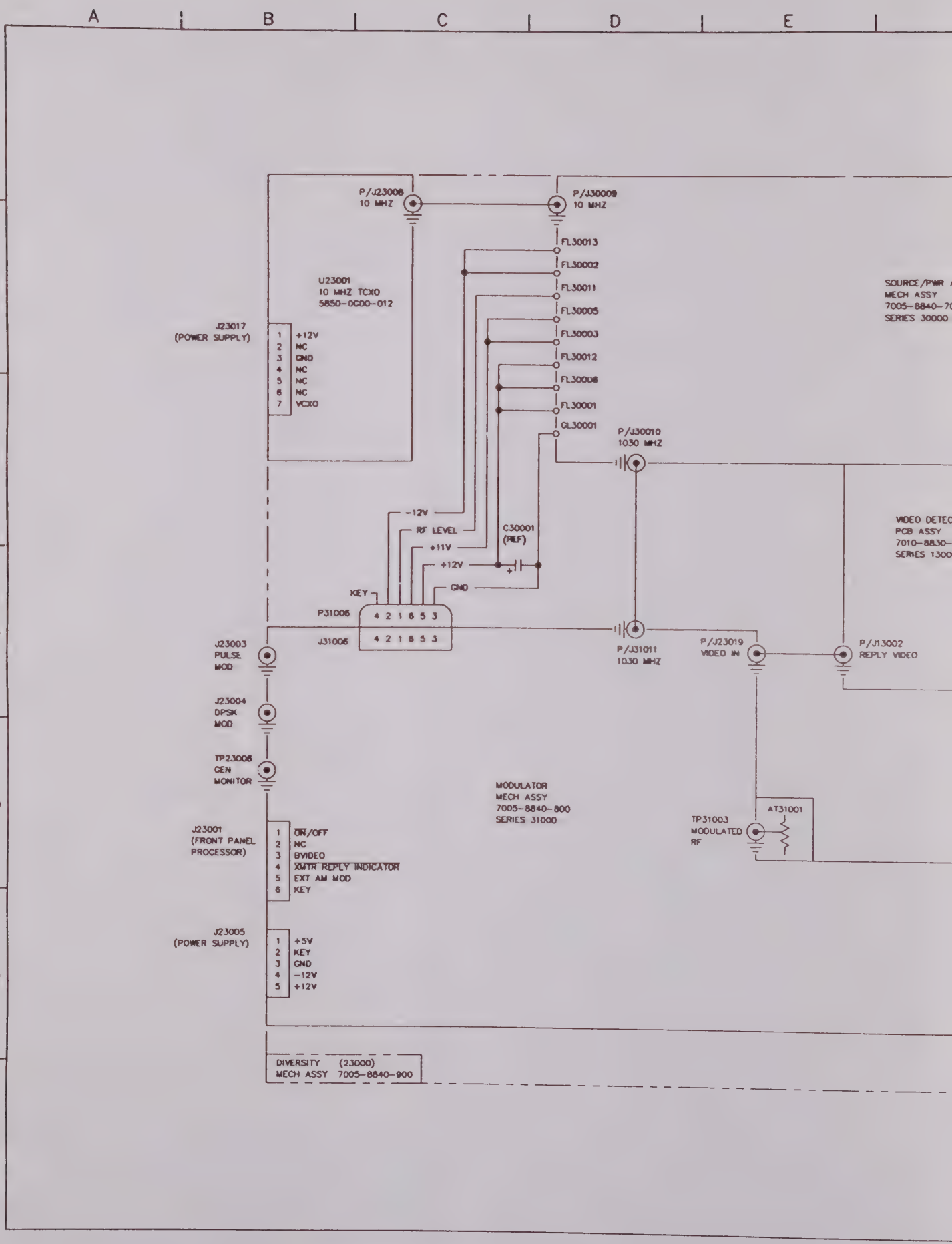
A
B
C
D
E
1
2
3
4
5
6
7
P/J23008
10 MHZ
P/J30009
10 MHZ
FL30013
FL30002
FL30011
FL30005
FL30003
FL30012
FL30008
FL30001
GL30001
U23001
10 MHZ TCXO
5850-0C00-012
J23017
(POWER SUPPLY)
1 +12V
2 NC
3 GND
4 NC
5 NC
6 NC
7 VCXO
P/J30010
1030 MHZ
-12V
RF LEVEL
+11V
+12V
GND
KEY
C30001
(REF)
P31006
4 2 1 6 5 3
J31006
4 2 1 6 5 3
P/J31011
1030 MHZ
J23003
PULSE
MOD
J23004
DPSK
MOD
TP23006
GEN
MONITOR
P/J23019
VIDEO IN
P/J13002
REPLY VIDEO
MODULATOR
MECH ASSY
7005-8840-800
SERIES 31000
TP31003
MODULATED
RF
AT31001
J23001
(FRONT PANEL
PROCESSOR)
1 ON/OFF
2 NC
3 BVIDEO
4 XMTR REPLY INDICATOR
5 EXT AM MOD
6 KEY
J23005
(POWER SUPPLY)
1 +5V
2 KEY
3 GND
4 -12V
5 +12V
DIVERSITY (23000)
MECH ASSY 7005-8840-900
SOURCE/PWR
MECH ASSY
7005-8840-7
SERIES 30000
VIDEO DETEC
PCB ASSY
7010-8830-
SERIES 1300

G H J K L

DATE	REV	CHANGE	APVD
6-24-91	A	DESIGN RELEASE RGC	SL
7-1-91	A1	INC REF #L104	SL

IFR SYSTEMS INC
10800 West York St., Wichita, Kansas 67215

DRAWN D.HAYNES 5/4/88	TITLE: INTERCONNECT DIVERSITY MECH, S-1403C W/MLD
CHECKED R.CRAWFORD 6-24-91	
APPROVED P.R.HARRIS 6-24-91	SIZE D; DWG NO. 0000-8840-900; REV A1
SCALE:	DO NOT SCALE; FSCM 51190; SHEET 1 OF 1

WIRE RUNNING LIST

FROM	NOTE	TO	COLOR	AWG	LG
FL31007		E26010	WH/MO	26	1.4
FL31008		E26002	WH/RD	26	1.8
FL31009	+12V	E26007	RED	26	1.7
FL31010	-12V	E26005	YEL	26	1.9
FL31014	27 ohm	R26056			
FL31015		E26011	WH/BRN	26	1.1
E29001	BUS WIRE	E25006		22	
E26001	27 ohm	R26056			

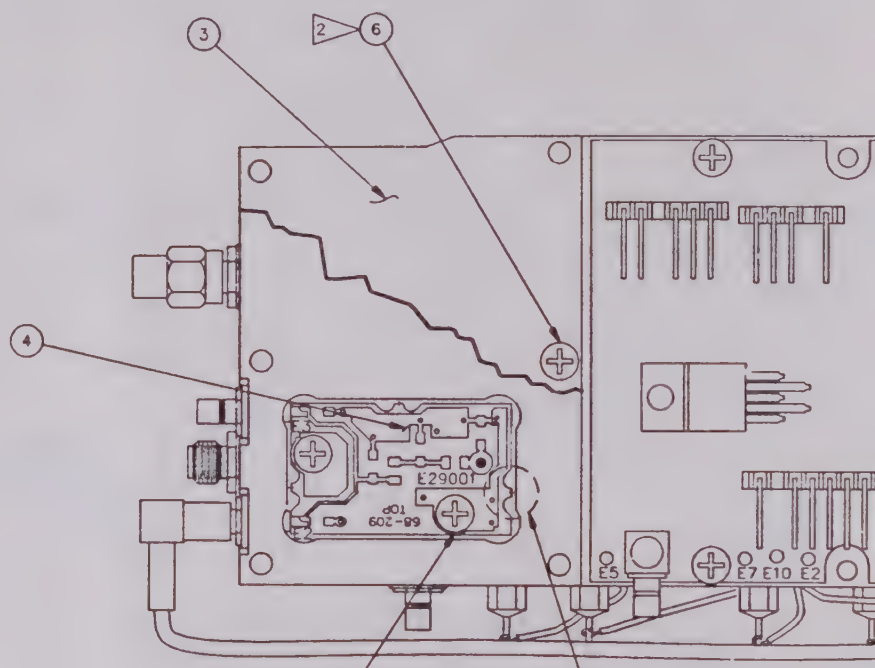

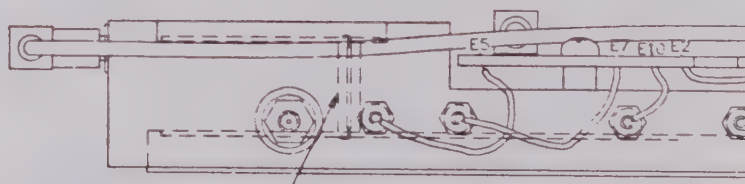

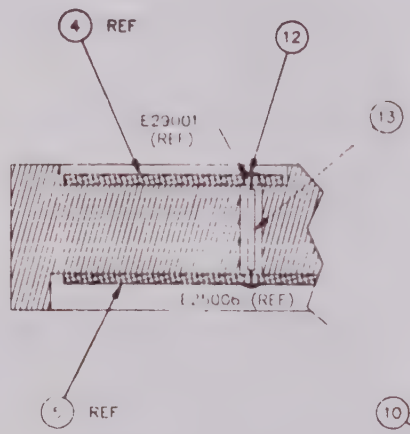

DETAIL - B

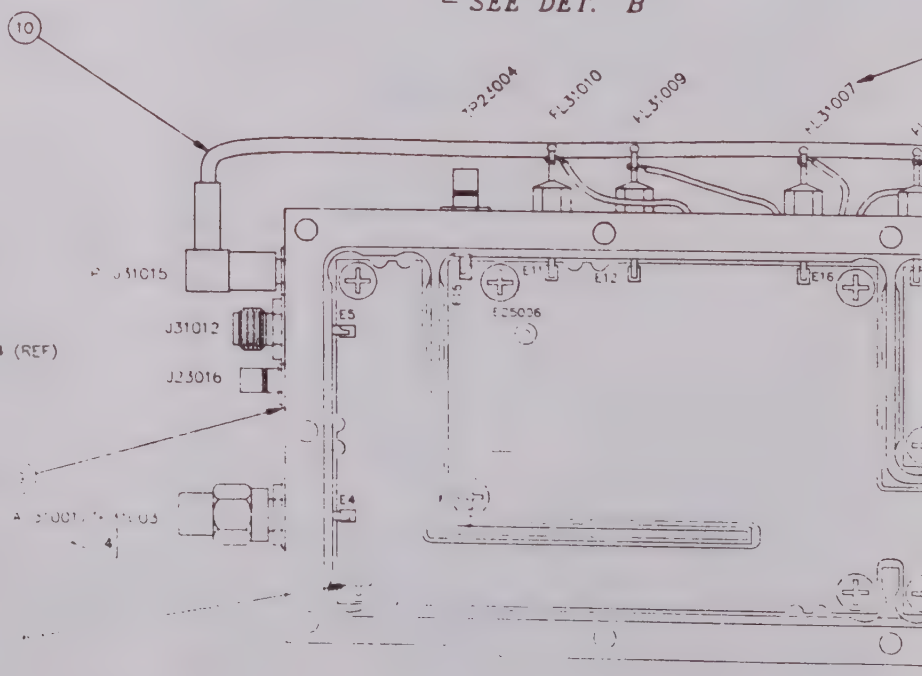

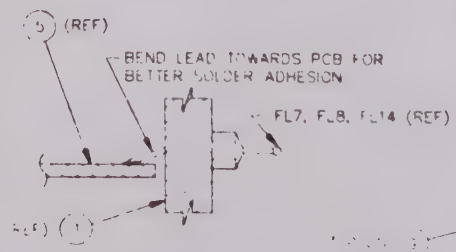

DETAIL "C"

DATE	REV	CHANGE	APPD
5-21-91	A	DESIGN RELEASE	SL

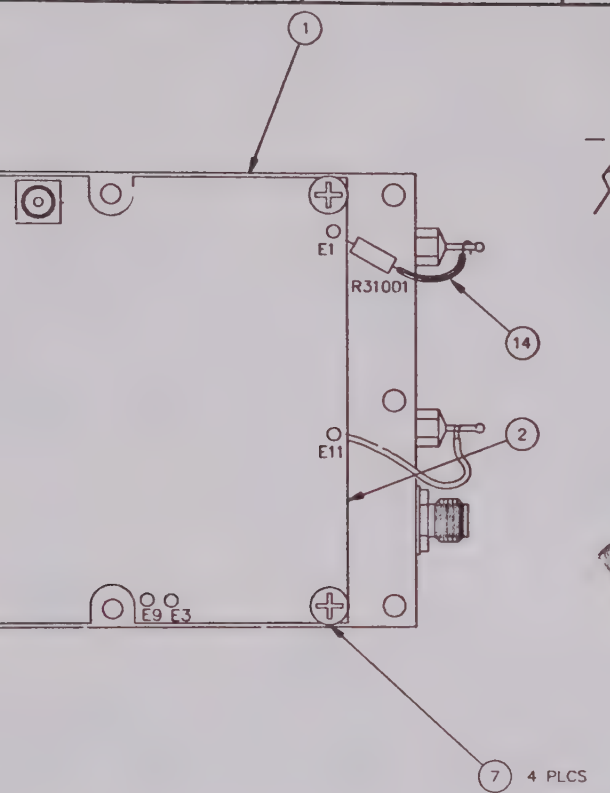

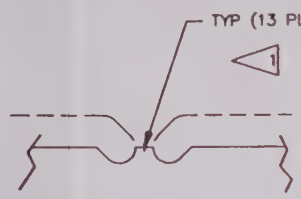

DETAIL A
SCALE: 4:1

DESIGN RELEASE
ANY CHANGES TO THIS
DOCUMENT MUST BE COORDINATED
THROUGH ENGINEERING
MAY 22 1991

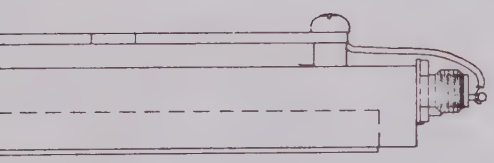

NOTES:

1. CUT BORDER AWAY FROM PC BOARD AT LOCATIONS SHOWN.
2. THIS IS THE ONLY SCREW USED IN COVER (ITEM 3) AT THIS STAGE OF ASS'Y.
3. ATTACH ALL WIRES NECESSARY TO (ITEM 2) PRIOR TO ATTACHING (ITEM 2) TO (ITEM 1).
4. DO NOT PUT AT31001 IN DEGREASER. INSTALL LAST.
5. REFERENCE SCHEMATIC: 0000-8840-400

DETAIL "C"

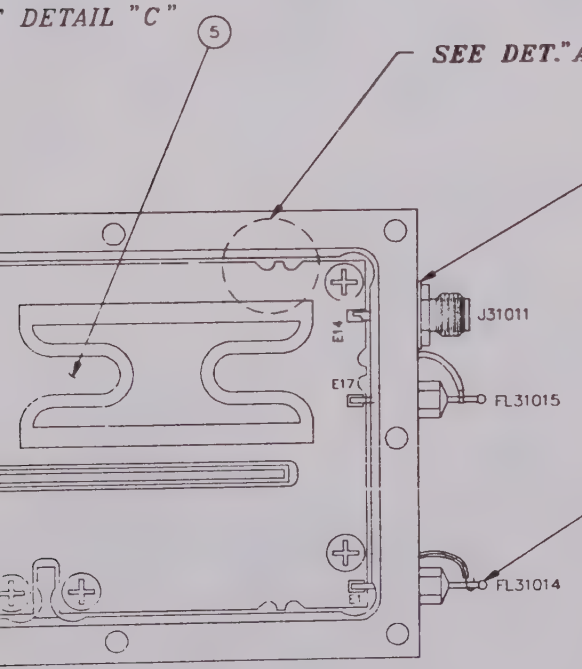

CAUTION:
CONTAINS PARTS AND ASSEMBLIES SUSCEPTIBLE TO DAMAGE BY ELECTROSTATIC DISCHARGE (ESD).

	IFR SYSTEMS INC	
DRAWN SIGLER 4-17-90	TITLE MECH ASS'Y MODULATOR	
CHECKED R. CRAWFORD 5-16-91		
APPROVED RENA HIXON 5-21-91	SIZE D / TYPE NO. 7005-8840-400	REV A
	SCALE 2:1 DO NOT SCALE	SHEET 1 OF 1

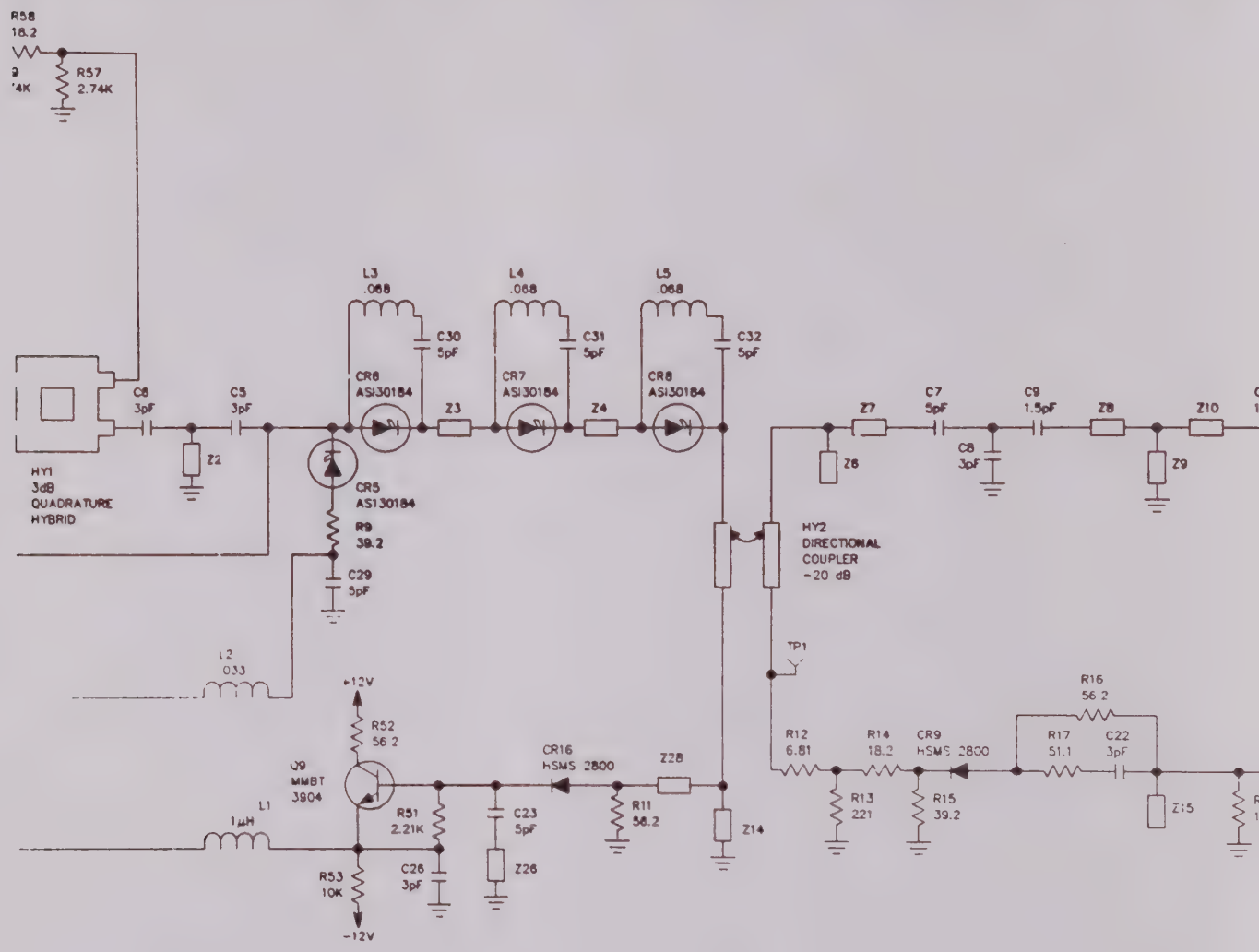
R58
18.2
R57
2.74K
L3
.068
L4
.068
L5
.068
C30
5pF
C31
5pF
C32
5pF
CR6
ASI30184
CR7
ASI30184
CR8
ASI30184
C6
3pF
C5
3pF
Z3
Z4
Z7
C7
5pF
C9
1.5pF
Z8
Z10
Z2
Z6
C8
3pF
Z9
HY1
3dB
QUADRATURE
HYBRID
CR5
AS130184
R9
39.2
C29
5pF
HY2
DIRECTIONAL
COUPLER
-20 dB
TP1
L2
033
+12V
R52
56.2
R16
56.2
R12
6.81
R14
18.2
CR9
HSMS 2800
R17
51.1
C22
3pF
Q9
MMBT
3904
CR16
HSMS 2800
Z28
L1
1µH
R51
2.21K
C23
5pF
R11
56.2
R13
221
R15
39.2
Z15
Z14
R53
10K
C26
3pF
Z26
-12V

THROUGH

T U V W X

DATE	REV	CHANGE	APVD
5-21-91	A	DESIGN RELEASE RGC	SL

STANDARDS:
(UNLESS OTHERWISE NOTED)
1. ALL REFERENCE NUMBERS CARRY AN ASSIGNED DESIGNATOR SERIES.
THIS SCHEMATIC CARRIES:
7005-8840-400 SERIES 31000
7010-8830-300 SERIES 26000
7010-8830-400 SERIES 25000
7010-6830-900 SERIES 29000
2. 7010-8830-300
ALL RESISTORS ARE 1/8W, 5% TOLERANCE.
7010-8830-400
ALL RESISTORS ARE 1/8W, 1% TOLERANCE.
3. ALL RESISTANCE IS EXPRESSED IN OHMS.
4. ALL CAPACITANCE IS EXPRESSED IN MICRO FARADS.

NOTES:
(UNLESS OTHERWISE NOTED)
1. LAST REFERENCE NUMBERS USED.
7005-8840-400 (SERIES 31000)
ATTEN15 J31015 J23016 TP4 R1
7010-8830-300: (SERIES 26000)
U5 C28 CR7 Q14 E11 TP9
J23005 J26002 J31006 R71
7010-8830-400: (SERIES 25000)
U1 R59 C32 CR16 Q9 Z28 TP1 E16 L5 HY2
7010-6830-900 (SERIES 29000)
C5 E3 L2
2. REFERENCE NUMBERS NOT USED.
7005-8840-400 (SERIES 31000)
NONE
7010-8830-300: (SERIES 26000)
C21-C26 CR4 CR5 R4 R8 R18 R31-R40 R42 Q7 Q8
TP1, TP2, TP4, TP5.
7010-8830-400 (SERIES 25000)
C1-C3, C14, C16, C24, C25, CR1-CR4,
CR15, Q1-Q3, Q6-Q8, R3-R7, R10, R33-R36,
R39, R41-R47, R54-R56, Z5 Z13, Z16,
Z18, Z20.
7010-6830-900 (SERIES 29000)
NONE

3 R1 & R2 ARE SELECT AT TEST. NOMINAL VALUE IS 1KΩ RANGE IS 1KΩ TO 10KΩ

AT31001
50Ω
TP31003
TEST RF
OUTPUT: -14dBM NOM.
INPUT: +21dBM NOM.

R48 6.81 — E4
R49 221 — E5
Z11
Z12
R50 56.2
J31012
RF I/O
TO/FROM
POWER TERM
OUTPUT: -30dBM NOM.
INPUT: +37dBM NOM. @ 50Ω WATTS

+12V R23 750 R24 12.1K
R21 681
R22 150
CR11 HSMS 2800
R40 47.5
E15
TP23004
TEST
VIDEO INPUT
CR10 1S2836
Q4 MMBT 3906
+12V
C17 10 16V
R29 10
Q5 MRF 5943
CR12 1S2836
R27 221
R30 22.1
R32 51.1
E6
VIDEO
E29001
L1 22
L2 .22
C1 56pF
C2 100pF
C3 56pF
E29003
C5 10pF
E29002
C4 10pF
J23016
XMTR VIDEO
TO FRONT PANEL
.5V NOM. INTO 50Ω
J31015
XMTR VIDEO
A6

VIDEO FILTER (29000)
PCBD 1700-6820-900
PCBD ASSY 7010-6830-900

C15 .1
R25 22.1K
+12V
U1A LF353
R26 10K
R31 1M
C27 0.1
R28 10K
-12V

MODULATOR MECH (31000)
MECH ASSY 7005-8840-400

5. IC FUNCTIONS NOT USED:

U3B 74HCT640 — 3 — 17
U3C 74HCT640 — 4 — 18
U3D 74HCT640 — 5 — 15
U3E 74HCT640 — 6 — 14

U1B LF353 — 5, 6, 7
U5A LF412 — 2, 3, 1
U4B 74LS123 — 6, 7, C, R/C, A, B, Q, Q, CLR, 3, 10, 5, 12, 11

DRAWN D.HAYNES	DATE 4-16-90	IFR SYSTEMS INC 10200 West York St., Wichita, Kansas 67215
CHECKED R.CRAWFORD	DATE 5-21-91	TITLE CIRCUIT SCHEMATIC MODULATOR
APPROVED P.R.HARRIS	DATE 5-21-91	SIZE EX DWG NO. 0000-8840-400 REV A
SCALE	DO NOT SCALE	FSCM 51190 SHEET 1 OF 2

1 2 3 4 5 6 7

ASSY NO.	REVISION	DESCRIPTION	LAST ECN	DATE INC
7005-8840-400	A	MECH ASSY, MODULATOR		10/30/71

STAT	REF.DES.	QTY	COMP. PART NO.	DESCRIPTION	EFFECTIVE
ACT		.14	6003-0000-003	WIRE,HOOK,TFE,26GA, 7S,RED	00/00/00
ACT		.16	6003-0000-005	WIRE,HOOK,TFE,26GA, 7S,YELLOW	00/00/00
ACT		.15	6003-0000-013	WIRE,HOOK,TFE,26GA, 7S,WHT/RED	00/00/00
ACT		.09	6003-0000-016	WIRE,HOOK,TFE,26GA, 7S,WHT/GRN	00/00/00
ACT		.12	6003-0000-018	WIRE,HOOK,TFE,26GA, 7S,WHT/VIO	00/00/00
ACT	*01	1.00	1415-8850-800	ENCL, MODULATOR/DIVERSITY	00/00/00
ACT	*02	1.00	7010-8830-300	PCB ASSY,DIVERSITY I/O	00/00/00
ACT	*03	1.00	1414-6850-900	COVER, VIDEO FILTER	00/00/00
ACT	*04	1.00	7010-6830-900	PCB, ASSY,VIDEO FILTER	00/00/00
ACT	*05	1.00	7010-8830-400	PCB ASSY,MODULATOR	00/00/00
ACT	*06	13.00	2803-0188-006	SCREW,4-40 X 3/16 PPHM	00/00/00
ACT	*07	4.00	2803-0250-006	SCREW,4-40 X 1/4 PPHM	00/00/00
ACT	*08	3.00	2840-7600-208	WASHER,ALUM,.380D,.250ID,.020T	00/00/00
ACT	*09	3.00	2840-7600-229	WASHER,ALUM,.310D,.188ID,.038T	00/00/00
ACT	*10	1.00	6050-0040-600	COAX ASSY,316,R F SMB/R F SMB	00/00/00
ACT	*11	2.00	2803-0125-006	SCREW,4-40 X 1/8 PPHM	00/00/00
ACT	*12	.00	1050-0000-073	WIRE,BUS,TINNED COPPER,22GA	00/00/00
ACT	*13	.07	6011-0027-001	TUBING,TF,22 AWG,NATURAL,TW	00/00/00
ACT	*14	.05	6011-0018-001	TUBING,TF,26 AWG,NATURAL,TW	00/00/00
ACT	AT31001	1.00	5650-0010-200	TERMINATION,M SMA,50 OHM,1.15	00/00/00
ACT	FL31007	3.00	1526-0000-006	CAP,PF 100, 200V,FEEDTHRU	00/00/00
ACT	FL31008	-.--	1526-0000-006	CAP,PF 100, 200V,FEEDTHRU	00/00/00
ACT	FL31009	3.00	5801-0000-006	FILTER,EMI/RFI 1500pF 8-32DIA*	00/00/00
ACT	FL31010	-.--	5801-0000-006	FILTER,EMI/RFI 1500pF 8-32DIA*	00/00/00
ACT	FL31014	-.--	1526-0000-006	CAP,PF 100, 200V,FEEDTHRU	00/00/00
ACT	FL31015	-.--	5801-0000-006	FILTER,EMI/RFI 1500pF 8-32DIA*	00/00/00

ASSY NO.	REVISION	DESCRIPTION	LAST ECN	DATE INC
7005-8840-400	A	MECH ASSY, MODULATOR		10/30/71

STAT	REF.DES.	QTY	COMP. PART NO.	DESCRIPTION	EFFECTIVE
ACT	J23016	3.00	2123-0000-038	CONN,M SMB,W/TERM,STR BULKHD *	00/00/00
ACT	J31011	3.00	2123-0000-030	CONN,FSMA,W/TERM,STR BULKHEAD*	00/00/00
ACT	J31012	-.--	2123-0000-030	CONN,FSMA,W/TERM,STR BULKHEAD*	00/00/00
ACT	J31015	-.--	2123-0000-038	CONN,M SMB,W/TERM,STR BULKHD *	00/00/00
ACT	R31001	1.00	4701-0270-003	RES, 5, 1/8W, 27 OHM	00/00/00
ACT	TP23004	-.--	2123-0000-038	CONN,M SMB,W/TERM,STR BULKHD *	00/00/00
ACT	TP31003	-.--	2123-0000-030	CONN,FSMA,W/TERM,STR BULKHEAD*	00/00/00

WIRE RUNNING LIST

FROM	NOTE	TO	COLOR	AWG	LG
FL31007		E26010	WHITE/ORANGE	26	1.4
FL31008		E26002	WHITE/RED	26	1.8
FL31009	+12V	E26007	RED	26	1.7
FL31010	-12V	E26005	YEL	26	1.9
FL31014	27 ohm	R26056			
FL31015		E26011	WHITE/GREEN	26	1.1
E29001	BUS WIRE	E25006		22	
E26001	27 ohm	R26056			

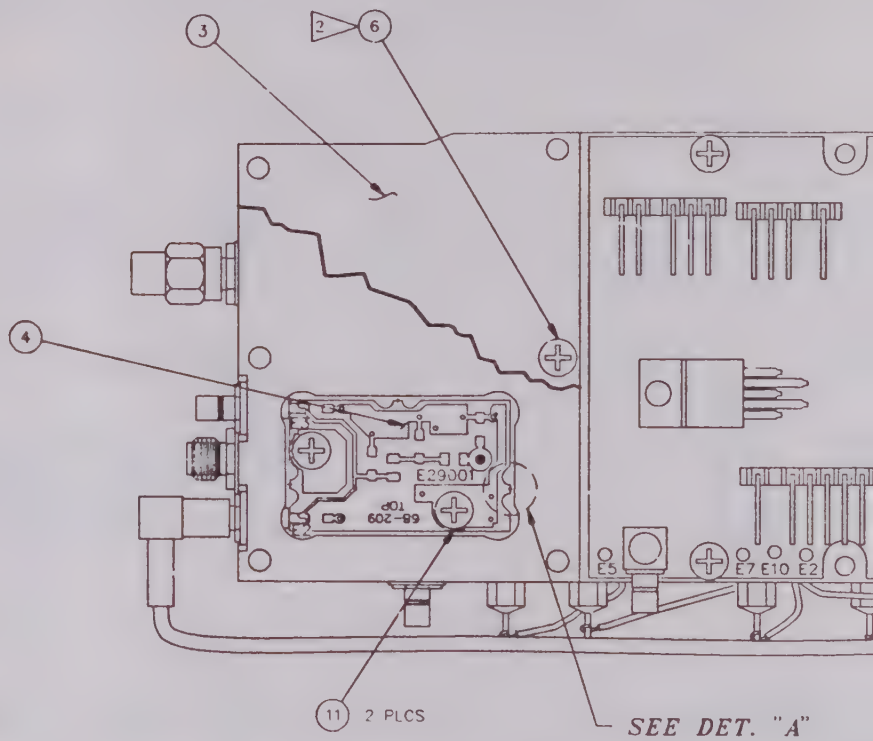

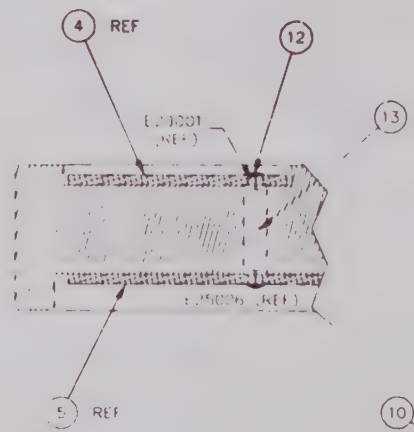

DETAIL - B

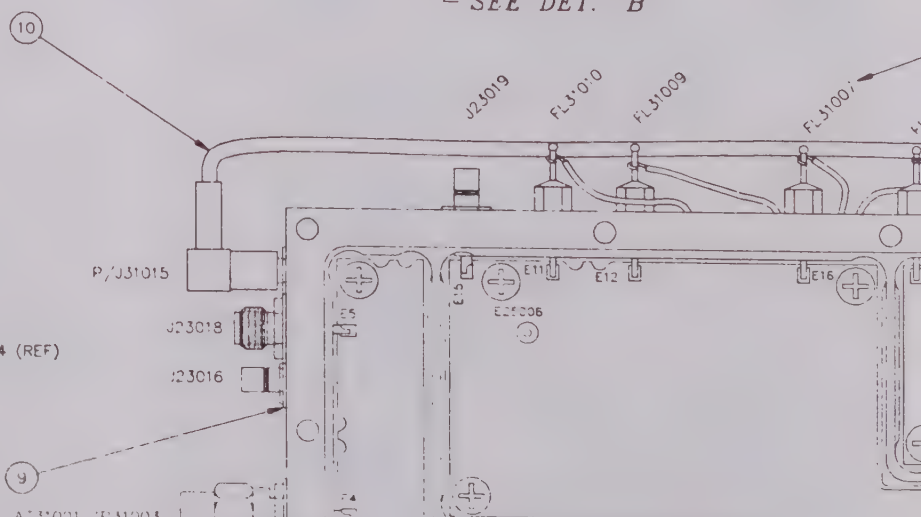

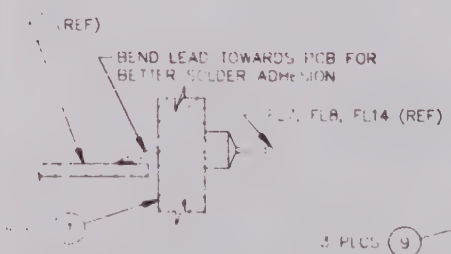

DETAIL "C"

G H J K L

DATE	REV	CHANGE	APVD
5-17-91	A	DESIGN RELEASE	SL

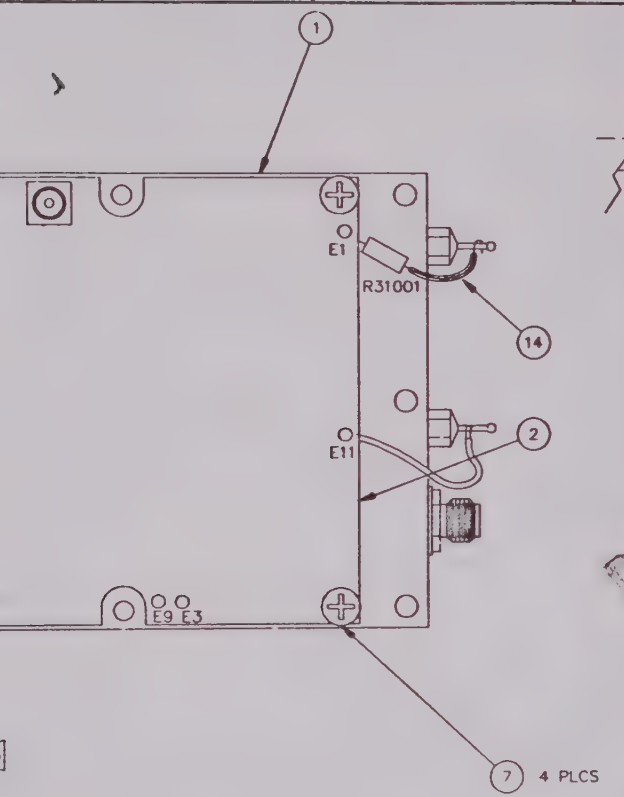

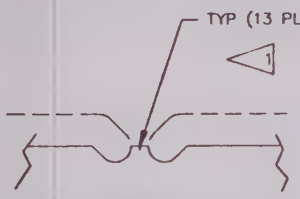

DETAIL A
SCALE: 4:1

DESIGN RELEASE
ANY FURTHER CHANGES TO THIS DOCUMENTATION MUST BE COORDINATED THROUGH ENGINEERING
MAY 22 1991

NOTES:

1. CUT BORDER AWAY FROM PC BOARD AT LOCATIONS SHOWN.
2. THIS IS THE ONLY SCREW USED IN COVER (ITEM 3) AT THIS STAGE OF ASS'Y.
3. ATTACH ALL WIRES NECESSARY TO (ITEM 2) PRIOR TO ATTACHING (ITEM 2) TO (ITEM 1).
4. DO NOT PUT AT31001 IN DEGREASER. INSTALL LAST.

5. REFERENCE SCHEMATIC: 0000-8840-800

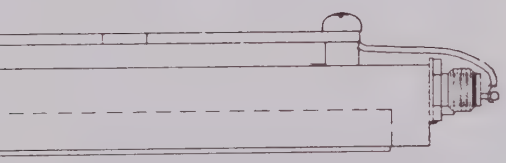

E DETAIL "C"

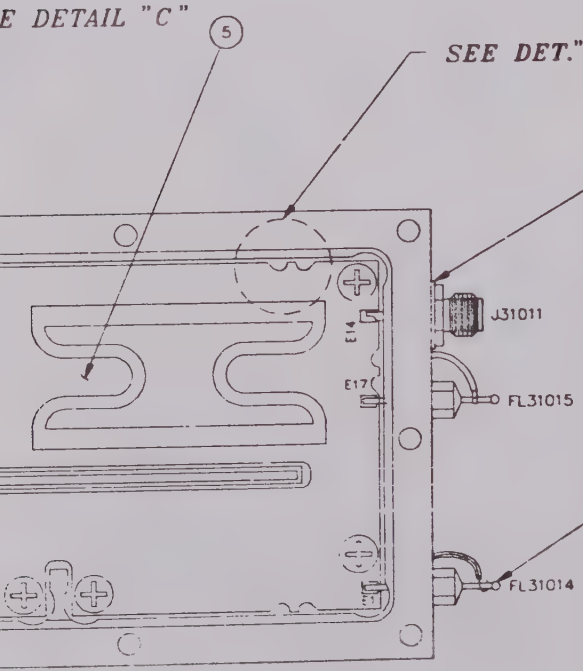

CAUTION:
CONTAINS PARTS AND ASSEMBLIES SUSCEPTIBLE TO DAMAGE BY ELECTROSTATIC DISCHARGE (ESD).

	FR SYSTEMS INC	
DRAWN SIGLER 4-17-90	TITLE MECH ASS'Y MODULATOR W/MLD	
CHECKED C CRAWFORD 5-16-91		
APPROVED RENA HIXON 5-17-91	SIZE D	DWG NO 7005-8840-800 REV A
	SCALE 2:1 DO NOT SCALE	FSCM 51190 SHEET 1 OF 1

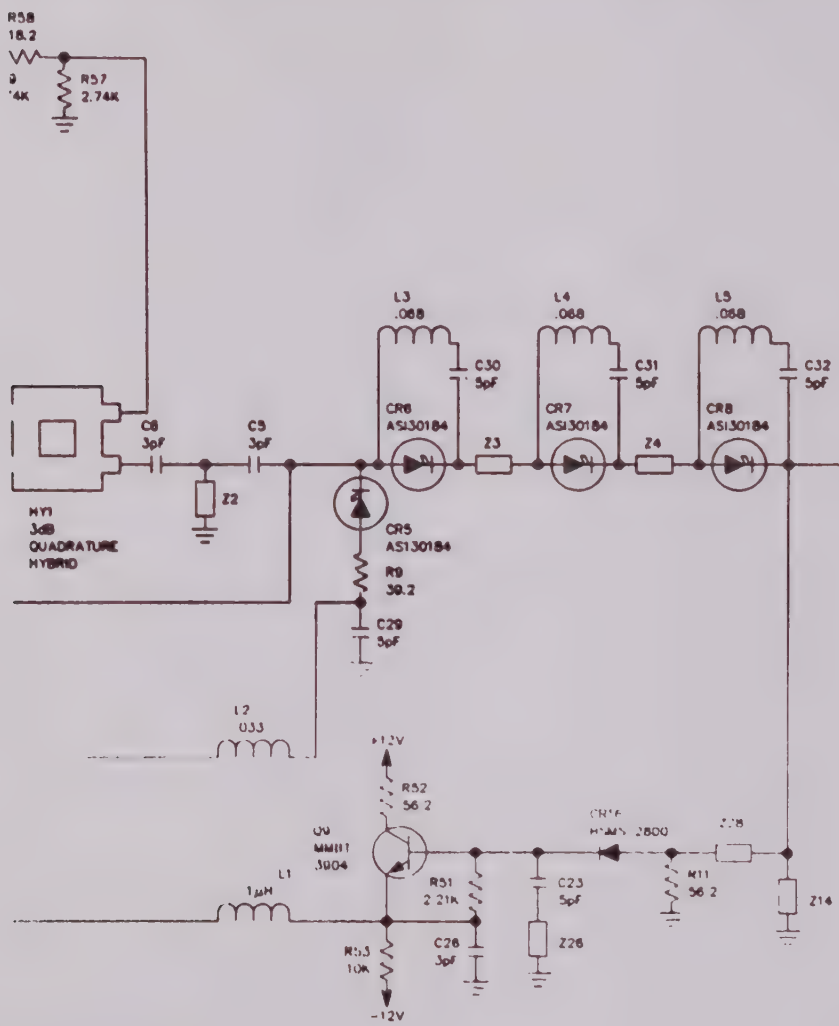
R58
18.2
R57
2.74K
L3
.068
L4
.068
L5
.068
C30
5pF
C31
5pF
C32
5pF
CR6
ASI30184
CR7
ASI30184
CR8
ASI30184
C6
3pF
C5
3pF
Z3
Z4
Z7
C7
5pF
C9
1.5pF
Z8
Z10
Z2
Z6
C8
3pF
Z9
HY1
3dB
QUADRATURE
HYBRID
CR5
AS130184
R9
39.2
C29
5pF
L2
033
+12V
R52
56.2
Q9
MMBT
3904
L1
1μH
R51
2.21K
C23
5pF
R11
56.2
Z14
C26
3pF
Z26
-12V

T U V W X

DATE	REV	CHANGE	APVD
5-30-91	A	DESIGN RELEASE	RGC SL
5-31-91	A1	INCORPORATED REF #L102	RGC SL

STANDARDS:
(UNLESS OTHERWISE NOTED)
1. ALL REFERENCE NUMBERS CARRY AN ASSIGNED DESIGNATOR SERIES.
THIS SCHEMATIC CARRIES:
7005-8840-800 SERIES 31000
7010-8830-300 SERIES 26000
7010-8830-800 SERIES 25000
7010-8830-900 SERIES 29000
2. 7010-8830-300
ALL RESISTORS ARE 1/8W, 5% TOLERANCE.
7010-8830-800
ALL RESISTORS ARE 1/8W, 1% TOLERANCE.
3. ALL RESISTANCE IS EXPRESSED IN OHMS.
4. ALL CAPACITANCE IS EXPRESSED IN MICRO FARADS.

NOTES:
(UNLESS OTHERWISE NOTED)
1. LAST REFERENCE NUMBERS USED.
7005-8840-800 (SERIES 31000)
ATI FL15 J31015 J23019 R1
7010-8830-300: (SERIES 26000)
U5 C28 CR7 Q14 E11 TP9
J23005 J26002 J31006 R71
7010-8830-800 (SERIES 25000)
U1 R59 C32 CR16 Q9 Z28 TP1 E16 L5 HY2
7010-8830-900 (SERIES 29000)
C5 E3 L2
2. REFERENCE NUMBERS NOT USED.
7005-8840-800 (SERIES 31000)
NONE
7010-8830-300: (SERIES 26000)
C21-C26 CR4 CR5 R4 R8 R18 R31-R40 R42 Q7 Q8
TP1, TP2, TP4, TP5.
7010-8830-800 (SERIES 25000)
C1-C3, C14, C16, C24, C25, CR1-CR4,
CR15, Q1-Q3, Q6-Q8, R3-R7, R10, R33-R36,
R39, R41-R47, R54-R56, Z5, Z13, Z18,
Z18, Z20.
7010-8830-900 (SERIES 29000)
NONE

3 R1 & R2 ARE SELECT AT TEST. NOMINAL VALUE IS .1KΩ
RANGE IS 1KΩ TO 10KΩ

AT31001
50Ω
TP31003
TEST RF
R48
18.2
E4
R49
150
E5
J23018
(ATTENUATOR)
RF OUT
Z11
Z12
R50
68.1
+12V
R23
750
R24
12.1K
R22
150
CR11
HSMS 2800
R40
47.5
E15
J23019
VIDEO IN
C17
10
16V
Q4
MMBT
3906
R29
10
Q5
MRF 5943
CR12
1S2836
R27
221
R30
22.1
R32
51.1
E6
VIDEO
E29001
L1
22
L2
.22
C1
56pF
C2
100pF
C3
56pF
E29003
C5
10pF
E29002
C4
10pF
J23016
XMTR VIDEO
TO FRONT PANEL
.5V NOM. INTO 50Ω
J31015
XMTR VIDEO
A6
VIDEO FILTER (29000)
PCBD 1700-6820-900
PCBD ASSY 7010-6830-900
C15
.1
R25
22.1K
U1A
LF353
R26
10K
R31
1M
C27
0.1
R28
10K
-12V

5. IC FUNCTIONS NOT USED:

U3B
74HCT640
U3C
74HCT640
U3D
74HCT640
U3E
74HCT640

U1B
LF353
U5A
LF412
U4B
74LS123

MODULATOR MECH (31000)
MECH ASSY 7005-8840-800

DRAWN D.HAYNES	DATE 4/16/90	IFR SYSTEMS INC
CHECKED R.CRAWFORD	DATE 5-28-91	TITLE CIRCUIT SCHEMATIC MODULATOR W/MLD
APPROVED P.R.HARRIS	DATE 5-30-91	SIZE EX DWG. NO. 0000-8840-800 REV A1
SCALE	DO NOT SCALE	FSC 51190 SHEET 1 of 2

ASSY NO.	REVISION	DESCRIPTION	LAST ECN	DATE INC
7005-8840-800	A1	MECH ASSY,MODULATOR W/MLD	#L102	05/31/91

STAT	REF.DES.	QTY	COMP. PART NO.	DESCRIPTION	EFFECTIVE
ACT		.14	6003-0000-003	WIRE,HOOK,TFE,26GA, 7S,RED	00/00/00
ACT		-.--	6003-0000-003	WIRE,HOOK,TFE,26GA, 7S,RED	00/00/00
ACT		.16	6003-0000-005	WIRE,HOOK,TFE,26GA, 7S,YELLOW	00/00/00
ACT		-.--	6003-0000-005	WIRE,HOOK,TFE,26GA, 7S,YELLOW	00/00/00
ACT		.15	6003-0000-013	WIRE,HOOK,TFE,26GA, 7S,WHT/RED	00/00/00
ACT		-.--	6003-0000-013	WIRE,HOOK,TFE,26GA, 7S,WHT/RED	00/00/00
ACT		.09	6003-0000-016	WIRE,HOOK,TFE,26GA, 7S,WHT/GRN	00/00/00
ACT		-.--	6003-0000-016	WIRE,HOOK,TFE,26GA, 7S,WHT/GRN	00/00/00
ACT		.12	6003-0000-018	WIRE,HOOK,TFE,26GA, 7S,WHT/VIO	00/00/00
ACT		-.--	6003-0000-018	WIRE,HOOK,TFE,26GA, 7S,WHT/VIO	00/00/00
ACT	*01	1.00	1415-8850-800	ENCL, MODULATOR/DIVERSITY	00/00/00
ACT	*01	-.--	1415-8850-800	ENCL, MODULATOR/DIVERSITY	00/00/00
ACT	*02	1.00	7010-8830-300	PCB ASSY,DIVERSITY I/O	00/00/00
ACT	*02	-.--	7010-8830-300	PCB ASSY,DIVERSITY I/O	00/00/00
ACT	*03	1.00	1414-6850-900	COVER, VIDEO FILTER	00/00/00
ACT	*03	-.--	1414-6850-900	COVER, VIDEO FILTER	00/00/00
ACT	*04	1.00	7010-6830-900	PCB, ASSY,VIDEO FILTER	00/00/00
ACT	*04	-.--	7010-6830-900	PCB, ASSY,VIDEO FILTER	00/00/00
ACT	*05	1.00	7010-8830-800	PCB ASSY,MODULATOR W/MLD	00/00/00
ACT	*05	-.--	7010-8830-800	PCB ASSY,MODULATOR W/MLD	00/00/00
ACT	*06	13.00	2803-0188-006	SCREW,4-40 X 3/16 PPHM	00/00/00
ACT	*06	-.--	2803-0188-006	SCREW,4-40 X 3/16 PPHM	00/00/00
ACT	*07	4.00	2803-0250-006	SCREW,4-40 X 1/4 PPHM	00/00/00
ACT	*07	-.--	2803-0250-006	SCREW,4-40 X 1/4 PPHM	00/00/00
ACT	*08	3.00	2840-7600-208	WASHER,ALUM,.380D,.250ID,.020T	00/00/00
ACT	*08	-.--	2840-7600-208	WASHER,ALUM,.380D,.250ID,.020T	00/00/00

ASSY NO.	REVISION	DESCRIPTION	LAST ECN	DATE INC
7005-8840-800	A1	MECH ASSY,MODULATOR W/MLD	#L102	05/31/91

STAT	REF.DES.	QTY	COMP. PART NO.	DESCRIPTION	EFFECTIVE
ACT	*09	3.00	2840-7600-229	WASHER,ALUM,.310D,.188ID,.038T	00/00/00
ACT	*09	-.--	2840-7600-229	WASHER,ALUM,.310D,.188ID,.038T	00/00/00
ACT	*10	1.00	6050-0040-600	COAX ASSY,316,R F SMB/R F SMB	00/00/00
ACT	*10	-.--	6050-0040-600	COAX ASSY,316,R F SMB/R F SMB	00/00/00
ACT	*11	2.00	2803-0125-006	SCREW,4-40 X 1/8 PPHM	00/00/00
ACT	*11	-.--	2803-0125-006	SCREW,4-40 X 1/8 PPHM	00/00/00
ACT	*12	.00	1050-0000-073	WIRE,BUS,TINNED COPPER,22GA	00/00/00
ACT	*12	-.--	1050-0000-073	WIRE,BUS,TINNED COPPER,22GA	00/00/00
ACT	*13	.07	6011-0027-001	TUBING,TF,22 AWG,NATURAL,TW	00/00/00
ACT	*13	-.--	6011-0027-001	TUBING,TF,22 AWG,NATURAL,TW	00/00/00
ACT	*14	.05	6011-0018-001	TUBING,TF,26 AWG,NATURAL,TW	00/00/00
ACT	*14	-.--	6011-0018-001	TUBING,TF,26 AWG,NATURAL,TW	00/00/00
ACT	AT31001	1.00	5650-0010-200	TERMINATION,M SMA,50 OHM,1.15	00/00/00
ACT	AT31001	-.--	5650-0010-200	TERMINATION,M SMA,50 OHM,1.15	00/00/00
ACT	FL31007	3.00	1526-0000-006	CAP,PF 100, 200V,FEEDTHRU	00/00/00
ACT	FL31007	-.--	1526-0000-006	CAP,PF 100, 200V,FEEDTHRU	00/00/00
ACT	FL31008	-.--	1526-0000-006	CAP,PF 100, 200V,FEEDTHRU	00/00/00
ACT	FL31008	-.--	1526-0000-006	CAP,PF 100, 200V,FEEDTHRU	00/00/00
ACT	FL31009	3.00	5801-0000-006	FILTER,EMI/RFI 1500pF 8-32DIA*	00/00/00
ACT	FL31009	-.--	5801-0000-006	FILTER,EMI/RFI 1500pF 8-32DIA*	00/00/00
ACT	FL31010	-.--	5801-0000-006	FILTER,EMI/RFI 1500pF 8-32DIA*	00/00/00
ACT	FL31010	-.--	5801-0000-006	FILTER,EMI/RFI 1500pF 8-32DIA*	00/00/00
ACT	FL31014	-.--	1526-0000-006	CAP,PF 100, 200V,FEEDTHRU	00/00/00
ACT	FL31014	-.--	1526-0000-006	CAP,PF 100, 200V,FEEDTHRU	00/00/00
ACT	FL31015	-.--	5801-0000-006	FILTER,EMI/RFI 1500pF 8-32DIA*	00/00/00
ACT	FL31015	-.--	5801-0000-006	FILTER,EMI/RFI 1500pF 8-32DIA*	00/00/00

*** QTY OF REF. DESIG.

*** QTY OF REF. DESIG.

ASSY NO.	REVISION	DESCRIPTION	LAST ECN	DATE INC
7005-8840-800	A1	MECH ASSY,MODULATOR W/MLD	#L102	05/31/91

STAT	REF.DES.	QTY	COMP. PART NO.	DESCRIPTION	EFFECTIVE
ACT	J23016	3.00	2123-0000-038	CONN,M SMB,W/TERM,STR BULKHD *	00/00/00
				*** QTY OF REF. DESIG.	
ACT	J23016	-.--	2123-0000-038	CONN,M SMB,W/TERM,STR BULKHD *	00/00/00
ACT	J23018	3.00	2123-0000-030	CONN,FSMA,W/TERM,STR BULKHEAD*	00/00/00
				*** QTY OF REF. DESIG.	
ACT	J23018	-.--	2123-0000-030	CONN,FSMA,W/TERM,STR BULKHEAD*	00/00/00
ACT	J23019	-.--	2123-0000-038	CONN,M SMB,W/TERM,STR BULKHD *	00/00/00
ACT	J23019	-.--	2123-0000-038	CONN,M SMB,W/TERM,STR BULKHD *	00/00/00
ACT	J31011	-.--	2123-0000-030	CONN,FSMA,W/TERM,STR BULKHEAD*	00/00/00
ACT	J31011	-.--	2123-0000-030	CONN,FSMA,W/TERM,STR BULKHEAD*	00/00/00
ACT	J31015	-.--	2123-0000-038	CONN,M SMB,W/TERM,STR BULKHD *	00/00/00
ACT	J31015	-.--	2123-0000-038	CONN,M SMB,W/TERM,STR BULKHD *	00/00/00
ACT	R31001	1.00	4701-0270-003	RES, 5, 1/8W, 27 OHM	00/00/00
ACT	R31001	-.--	4701-0270-003	RES, 5, 1/8W, 27 OHM	00/00/00
ACT	TP31003	-.--	2123-0000-030	CONN,FSMA,W/TERM,STR BULKHEAD*	00/00/00
ACT	TP31003	-.--	2123-0000-030	CONN,FSMA,W/TERM,STR BULKHEAD*	00/00/00

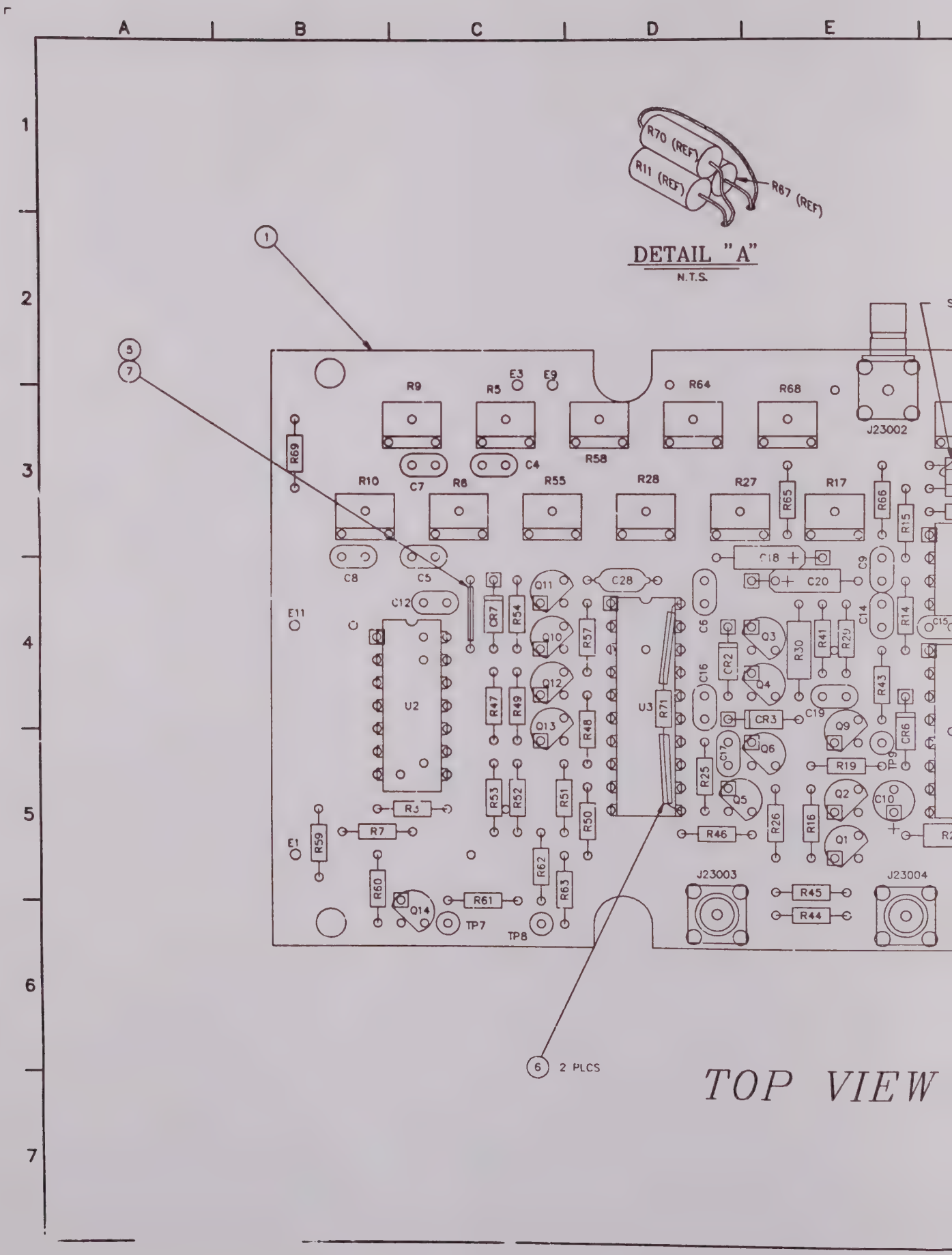

DETAIL "A"
N.T.S.
R70 (REF)
R11 (REF)
R67 (REF)
J23002
J23003
J23004
U2
U3
2 PLCS
TOP VIEW

DATE	REV	CHANGE	APVD
5-28-91	A	DESIGN RELEASE	SL

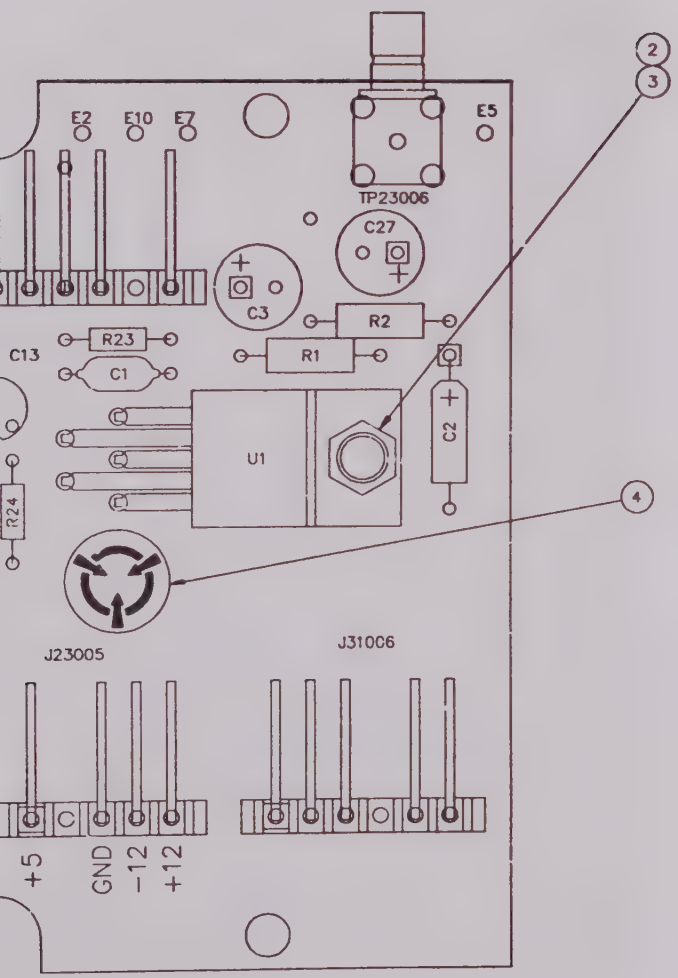

NOTES:

1. THIS PC BD ASSY CARRIERS A REF DES SERIES OF 26000 (i.e.,R1 IS R26001).

2. REF. SCHEM. 0000-8840-400,S-1403C
   REF. SCHEM. 0000-8840-800,S-1403C W/MLD

CAUTION:
CONTAINS PARTS AND ASSEMBLIES SUSCEPTIBLE TO DAMAGE BY ELECTROSTATIC DISCHARGE (ESD).

DRAWN WAW 2-22-91	IFR SYSTEMS INC	
CHECKED 5/28/91	TITLE PC BD ASS'Y DIVERSITY I/O	
APPROVED 5/28/91	SIZE D	DWG. NO. 7010-8830-300 REV A
	SCALE 4:1	DO NOT SCALE FSCM 51190 SHEET 1 OF 1

ASSY NO.	REVISION	DESCRIPTION	LAST ECN	DATE INC
7010-8830-300	A	PCB ASSY,DIVERSITY I/O		10/30/71

STAT	REF.DES.	QTY	COMP. PART NO.	DESCRIPTION	EFFECTIVE
ACT	*01	1.00	1700-8820-300	PC BD,DIVERSITY I/O	00/00/00
ACT	*02	1.00	2803-0188-006	SCREW,4-40 X 3/16 PPHM	00/00/00
ACT	*03	1.00	2850-0000-020	NUT,HEX,SMALL PAT,4-40	00/00/00
ACT	*04	1.00	2400-7856-800	LABEL,ESD	00/00/00
ACT	*05	.00	1050-0000-073	WIRE,BUS,TINNED COPPER,22GA	00/00/00
ACT	*06	.06	6011-0022-001	TUBING,TF,24 AWG,NATURAL,TW	00/00/00
ACT	*07	.02	6011-0027-001	TUBING,TF,22 AWG,NATURAL,TW	00/00/00
ACT	C26001	2.00	1521-0000-008	CAP,UF .10 50V,DIP Z5U *	00/00/00
ACT	C26002	3.00	1507-0105-018	CAP,uF 1.0, 35V,TANT, 20 *	00/00/00
ACT	C26003	1.00	1508-0157-020	CAP, UF 150, 15V, TANT RDL *	00/00/00
ACT	C26004	3.00	1506-0101-017	CAP,pF 100, 100V NPO 5 *	00/00/00
ACT	C26005	-.--	1506-0101-017	CAP,pF 100, 100V NPO 5 *	00/00/00
ACT	C26006	5.00	1506-0103-017	CAP, uF .010, 100V, NPO *	00/00/00
ACT	C26007	1.00	1506-0151-017	CAP,PF 150, 100V,NPO, 5	00/00/00
ACT	C26008	-.--	1506-0101-017	CAP,pF 100, 100V NPO 5 *	00/00/00
ACT	C26009	1.00	1506-0220-017	CAP,PF 22, 100V,NPO, 5	00/00/00
ACT	C26010	1.00	1580-4792-305	CAPACITOR 4.7 uF,35V *	00/00/00
ACT	C26011	1.00	1580-1000-200	CAP,UF, 10, 25V,ELE RDL	00/00/00
ACT	C26012	-.--	1506-0103-017	CAP, uF .010, 100V, NPO *	00/00/00
ACT	C26013	-.--	1506-0103-017	CAP, uF .010, 100V, NPO *	00/00/00
ACT	C26014	-.--	1506-0103-017	CAP, uF .010, 100V, NPO *	00/00/00
ACT	C26015	-.--	1506-0103-017	CAP, uF .010, 100V, NPO *	00/00/00
ACT	C26016	1.00	1506-0180-017	CAP,PF 18, 100V,NPO, 5	00/00/00
ACT	C26017	1.00	1506-0100-017	CAP,PF 10, 100V,NPO, 5	00/00/00
ACT	C26018	-.--	1507-0105-018	CAP,uF 1.0, 35V,TANT, 20 *	00/00/00
ACT	C26019	1.00	1506-0391-017	CAP,PF 390, 100V,NPO, 5	00/00/00

ASSY NO.	REVISION	DESCRIPTION	LAST ECN	DATE INC
7010-8830-300	A	PCB ASSY,DIVERSITY I/O		10/30/71

STAT	REF.DES.	QTY	COMP. PART NO.	DESCRIPTION	EFFECT
ACT	C26020	-.--	1507-0105-018	CAP,uF 1.0, 35V,TANT, 20 *	00/0
ACT	C26021	29.00	0002-0000-000	*** REF DESIG NOT USED ***	00/
ACT	C26022	-.--	0002-0000-000	*** REF DESIG NOT USED ***	00/
ACT	C26023	-.--	0002-0000-000	*** REF DESIG NOT USED ***	00/
ACT	C26024	-.--	0002-0000-000	*** REF DESIG NOT USED ***	00/00/00
ACT	C26025	-.--	0002-0000-000	*** REF DESIG NOT USED ***	00/00/00
ACT	C26026	-.--	0002-0000-000	*** REF DESIG NOT USED ***	00/00/00
ACT	C26027	1.00	1580-4702-105	CAP, UF 47, 10V, ELE RDL *	00/00/00
ACT	C26028	-.--	1521-0000-008	CAP,UF .10 50V,DIP Z5U *	00/00/00
ACT	CR26001	1.00	4818-0000-015	DIODE,LM329C,6.9V ZENER REF *	00/00/00
ACT	CR26002	3.00	4816-0000-001	DIODE,5082-2800,S BAR, 70VBR	00/00/00
ACT	CR26003	-.--	4816-0000-001	DIODE,5082-2800,S BAR, 70VBR	00/00/00
ACT	CR26004	-.--	0002-0000-000	*** REF DESIG NOT USED ***	00/00/00
ACT	CR26005	-.--	0002-0000-000	*** REF DESIG NOT USED ***	00/00/00
ACT	CR26006	-.--	4816-0000-001	DIODE,5082-2800,S BAR, 70VBR	00/00/00
ACT	CR26007	1.00	4815-0000-003	DIODE, 1N4148 ,SIGNAL, 75PRV	00/00/00
ACT	J23001	1.00	2115-1002-007	CONN,MOLEX 22-05-2071	00/00/00
ACT	J23003	2.00	2200-2010-400	CONN,M SMB,PC MTG,STR,.453LG	00/00/00
ACT	J23004	-.--	2200-2010-400	CONN,M SMB,PC MTG,STR,.453LG	00/00/00
ACT	J23005	1.00	2115-1002-005	CONN,MOLEX 22-05-2051	00/00/00
ACT	J26002	2.00	2200-2094-300	CONN,M SMB,PC MTG,RTANG,NO THD	00/00/00
ACT	J31006	1.00	2115-1002-006	CONN,MOLEX 22-05-2061	00/00/00
ACT	Q26001	8.00	4807-0000-001	TRANS, 2N3903 ,NPN HS SW	00/00/00
ACT	Q26002	-.--	4807-0000-001	TRANS, 2N3903 ,NPN HS SW	00/00/00
ACT	Q26003	4.00	4807-0000-002	TRANS, 2N3905 ,PNP HS SW	00/00/00
ACT	Q26004	-.--	4807-0000-001	TRANS, 2N3903 ,NPN HS SW	00/00/00

ASSY NO.	REVISION	DESCRIPTION	LAST ECN	DATE INC
7010-8830-300	A	PCB ASSY,DIVERSITY I/O		10/30/71

STAT	REF.DES.	QTY	COMP. PART NO.	DESCRIPTION	EFFECTIVE
ACT	Q26005	-.--	4807-0000-002	TRANS, 2N3905 ,PNP HS SW	00/00/00
ACT	Q26006	-.--	4807-0000-001	TRANS, 2N3903 ,NPN HS SW	00/00/00
ACT	Q26007	-.--	0002-0000-000	*** REF DESIG NOT USED ***	00/00/00
ACT	Q26008	-.--	0002-0000-000	*** REF DESIG NOT USED ***	00/00/00
ACT	Q26009	-.--	4807-0000-001	TRANS, 2N3903 ,NPN HS SW	00/00/00
ACT	Q26010	-.--	4807-0000-002	TRANS, 2N3905 ,PNP HS SW	00/00/00
ACT	Q26011	-.--	4807-0000-002	TRANS, 2N3905 ,PNP HS SW	00/00/00
ACT	Q26012	-.--	4807-0000-001	TRANS, 2N3903 ,NPN HS SW	00/00/00
ACT	Q26013	-.--	4807-0000-001	TRANS, 2N3903 ,NPN HS SW	00/00/00
ACT	Q26014	-.--	4807-0000-001	TRANS, 2N3903 ,NPN HS SW	00/00/00
ACT	R26001	1.00	4706-2802-001	RES, 1, 1/4W, 28.0K OHM	00/00/00
ACT	R26002	1.00	4706-2323-001	RES, 1, 1/4W, 232K OHM	00/00/00
ACT	R26003	2.00	4701-0822-003	RES,5,1/8W 8.2K OHM *	00/00/00
ACT	R26004	-.--	0002-0000-000	*** REF DESIG NOT USED ***	00/00/00
ACT	R26005	4.00	4753-0501-002	POT 500 OHM	00/00/00
ACT	R26006	-.--	4753-0501-002	POT 500 OHM	00/00/00
ACT	R26007	-.--	4701-0822-003	RES,5,1/8W 8.2K OHM *	00/00/00
ACT	R26008	-.--	0002-0000-000	*** REF DESIG NOT USED ***	00/00/00
ACT	R26009	-.--	4753-0501-002	POT 500 OHM	00/00/00
ACT	R26010	-.--	4753-0501-002	POT 500 OHM	00/00/00
ACT	R26011	1.00	4701-0393-003	RES, 5, 1/8W, 39K OHM	00/00/00
ACT	R26012	2.00	4701-0473-003	RES, 5, 1/8W, 47K OHM *	00/00/00
ACT	R26013	2.00	4753-0103-002	POT, 10K OHM	00/00/00
ACT	R26014	1.00	4701-0273-003	RES, 5, 1/8W, 27K OHM	00/00/00
ACT	R26015	3.00	4701-0221-003	RES, 5, 1/8W, 220 OHM	00/00/00
ACT	R26016	3.00	4701-0471-003	RES, 5, 1/8W, 470 OHM	00/00/00

ASSY NO.	REVISION	DESCRIPTION	LAST ECN	DATE INC
7010-8830-300	A	PCB ASSY,DIVERSITY I/O		10/30/71

STAT	REF.DES.	QTY	COMP. PART NO.	DESCRIPTION	EFFECTIVE
ACT	R26017	3.00	4753-0102-002	POT 1K OHM	00/00/00
ACT	R26018	-.--	0002-0000-000	*** REF DESIG NOT USED ***	00/00/00
ACT	R26019	-.--	4701-0471-003	RES, 5, 1/8W, 470 OHM	00/00/00
ACT	R26020	1.00	4706-9090-001	RES, 1, 1/4W, 909 OHM	00/00/00
ACT	R26021	-.--	4701-0473-003	RES, 5, 1/8W, 47K OHM *	00/00/00
ACT	R26022	-.--	4701-0221-003	RES, 5, 1/8W, 220 OHM	00/00/00
ACT	R26023	1.00	4701-0474-003	RES, 5, 1/8W, 470K OHM	00/00/00
ACT	R26024	2.00	4701-0272-003	RES, 5, 1/8W, 2.7K OHM	00/00/00
ACT	R26025	2.00	4701-0102-003	RES, 5, 1/8W, 1.0K OHM	00/00/00
ACT	R26026	3.00	4701-0122-003	RES, 5, 1/8W, 1.2K OHM	00/00/00
ACT	R26027	1.00	4753-0201-002	POT 200 OHM	00/00/00
ACT	R26028	-.--	4753-0102-002	POT 1K OHM	00/00/00
ACT	R26029	1.00	4701-0101-003	RES, 5, 1/8W, 100 OHM *	00/00/00
ACT	R26030	1.00	4702-0471-003	RES, 5, 1/4W, 470 OHM	00/00/00
ACT	R26031	-.--	0002-0000-000	*** REF DESIG NOT USED ***	00/00/00
ACT	R26032	-.--	0002-0000-000	*** REF DESIG NOT USED ***	00/00/00
ACT	R26033	-.--	0002-0000-000	*** REF DESIG NOT USED ***	00/00/00
ACT	R26034	-.--	0002-0000-000	*** REF DESIG NOT USED ***	00/00/00
ACT	R26035	-.--	0002-0000-000	*** REF DESIG NOT USED ***	00/00/00
ACT	R26036	-.--	0002-0000-000	*** REF DESIG NOT USED ***	00/00/00
ACT	R26037	-.--	0002-0000-000	*** REF DESIG NOT USED ***	00/00/00
ACT	R26038	-.--	0002-0000-000	*** REF DESIG NOT USED ***	00/00/00
ACT	R26039	-.--	0002-0000-000	*** REF DESIG NOT USED ***	00/00/00
ACT	R26040	-.--	0002-0000-000	*** REF DESIG NOT USED ***	00/00/00
ACT	R26041	1.00	4701-0680-003	RES, 5, 1/8W, 68 OHM	00/00/00
ACT	R26042	-.--	0002-0000-000	*** REF DESIG NOT USED ***	00/00/00

ASSY NO. 7010-8830-300 | REVISION A | DESCRIPTION PCB ASSY,DIVERSITY I/O | LAST ECN | DATE INC 10/30/71

STAT	REF.DES.	QTY	COMP. PART NO.	DESCRIPTION			EFFECTIVE
ACT	R26043	1.00	4701-0271-003	RES, 5, 1/8W,	270	OHM	00/00/00
ACT	R26044	1.00	4701-0331-003	RES, 5, 1/8W,	330	OHM	00/00/00
ACT	R26045	1.00	4701-0683-003	RES, 5, 1/8W,	68K	OHM	00/00/00
ACT	R26046	-.--	4701-0122-003	RES, 5, 1/8W,	1.2K	OHM	00/00/00
ACT	R26047	3.00	4701-0472-003	RES, 5, 1/8W,	4.7K	OHM	00/00/00
ACT	R26048	2.00	4701-0562-003	RES, 5, 1/8W,	5.6K	OHM	00/00/00
ACT	R26049	-.--	4701-0471-003	RES, 5, 1/8W,	470	OHM	00/00/00
ACT	R26050	-.--	4701-0472-003	RES, 5, 1/8W,	4.7K	OHM	00/00/00
ACT	R26051	-.--	4701-0562-003	RES, 5, 1/8W,	5.6K	OHM	00/00/00
ACT	R26052	1.00	4701-0222-003	RES, 5, 1/8W,	2.2K	OHM	00/00/00
ACT	R26053	1.00	4701-0681-003	RES, 5, 1/8W,	680	OHM	00/00/00
ACT	R26054	-.--	4701-0102-003	RES, 5, 1/8W,	1.0K	OHM	00/00/00
ACT	R26055	-.--	4753-0102-002	POT 1K OHM			00/00/00
ACT	R26057	1.00	4701-0152-003	RES, 5, 1/8W,	1.5K OHM	*	00/00/00
ACT	R26058	1.00	4753-0202-002	POT, 2K OHM			00/00/00
ACT	R26059	-.--	4701-0272-003	RES, 5, 1/8W,	2.7K	OHM	00/00/00
ACT	R26060	-.--	4701-0472-003	RES, 5, 1/8W,	4.7K	OHM	00/00/00
ACT	R26061	2.00	4701-0470-003	RES, 5, 1/8W,	47	OHM	00/00/00
ACT	R26062	-.--	4701-0470-003	RES, 5, 1/8W,	47	OHM	00/00/00
ACT	R26063	-.--	4701-0122-003	RES, 5, 1/8W,	1.2K	OHM	00/00/00
ACT	R26064	1.00	4756-2510-400	POT 100K OHM			00/00/00
ACT	R26065	1.00	4701-0104-003	RES, 5, 1/8W,	100K	OHM	00/00/00
ACT	R26066	1.00	4701-0223-003	RES, 5, 1/8W,	22K	OHM	00/00/00
ACT	R26067	2.00	4701-0103-003	RES, 5, 1/8W,	10K OHM	*	00/00/00
ACT	R26068	-.--	4753-0103-002	POT, 10K OHM			00/00/00
ACT	R26069	-.--	4701-0221-003	RES, 5, 1/8W,	220	OHM	00/00/00

ASSY NO.	REVISION	DESCRIPTION	LAST ECN	DATE INC
7010-8830-300	A	PCB ASSY,DIVERSITY I/O		10/30/71

STAT	REF.DES.	QTY	COMP. PART NO.	DESCRIPTION		EFFECTIVE
ACT	R26070	-.--	4701-0103-003	RES, 5, 1/8W, 10K OHM	*	00/00/00
ACT	R26071	1.00	4701-0392-003	RES, 5, 1/8W, 3.9K OHM	*	00/00/00
ACT	TP23006	-.--	2200-2094-300	CONN,M SMB,PC MTG,RTANG,NO THD		00/00/00
ACT	TP26001	-.--	0002-0000-000	*** REF DESIG NOT USED	***	00/00/00
ACT	TP26002	-.--	0002-0000-000	*** REF DESIG NOT USED	***	00/00/00
ACT	TP26003	-.--	0002-0000-000	*** REF DESIG NOT USED	***	00/00/00
ACT	TP26004	-.--	0002-0000-000	*** REF DESIG NOT USED	***	00/00/00
ACT	TP26005	-.--	0002-0000-000	*** REF DESIG NOT USED	***	00/00/00
ACT	TP26007	3.00	2114-0000-007	POST,GANG,PCB,.025SQ,.443LG	*	00/00/00
ACT	TP26008	-.--	2114-0000-007	POST,GANG,PCB,.025SQ,.443LG	*	00/00/00
ACT	TP26009	-.--	2114-0000-007	POST,GANG,PCB,.025SQ,.443LG	*	00/00/00
ACT	U26001	1.00	3224-0009-000	IC,2931,ADJ 3V-24V REGULATOR		00/00/00
ACT	U26002	1.00	3131-0000-032	IC,74LS02,QUAD 2-INPUT NOR		00/00/00
ACT	U26003	1.00	3214-9464-000	IC,INV OCT TRI-STATE XCVR	*	00/00/00
ACT	U26004	1.00	3131-0000-024	IC,74LS123,DUAL MULTIVIBRATOR		00/00/00
ACT	U26005	1.00	3135-0000-054	IC,412,DUAL J-FET OP AMP	*	00/00/00

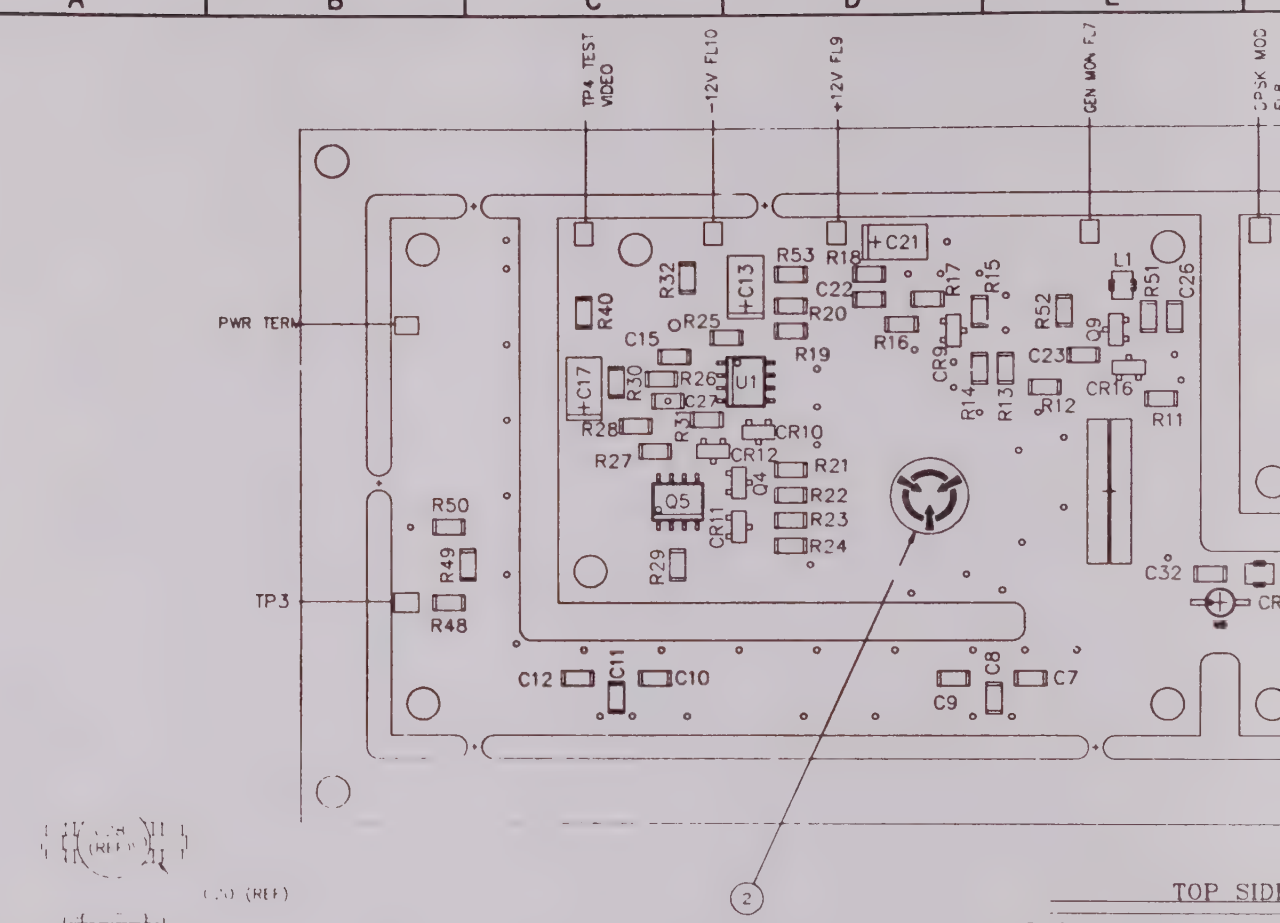

TOP SIDE

SHOWING COMPONENT

DETAIL "A"
SCALE NONE

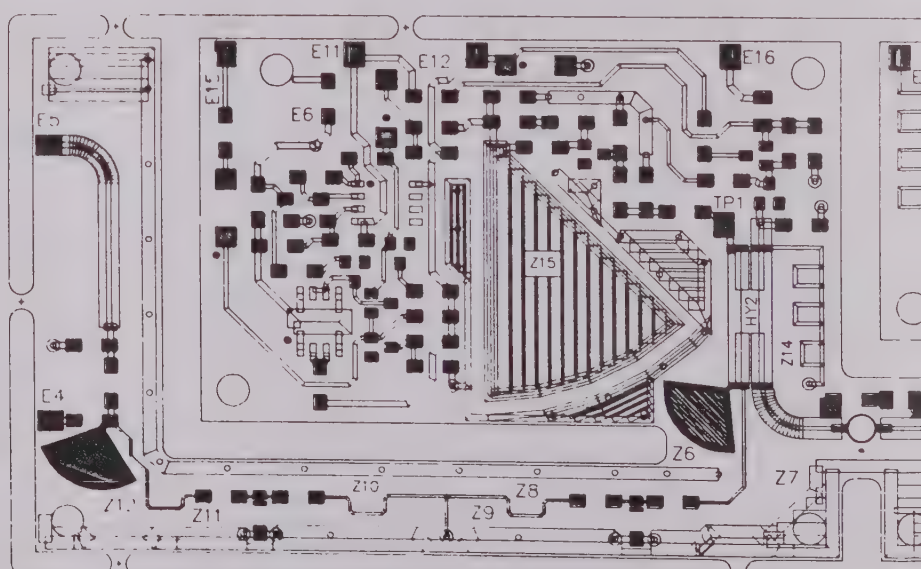

TOP SIDE

SHOWING PADS AN

DATE	REV	CHANGE	APVD
5-23-91	-B-	DESIGN RELEASE	SL

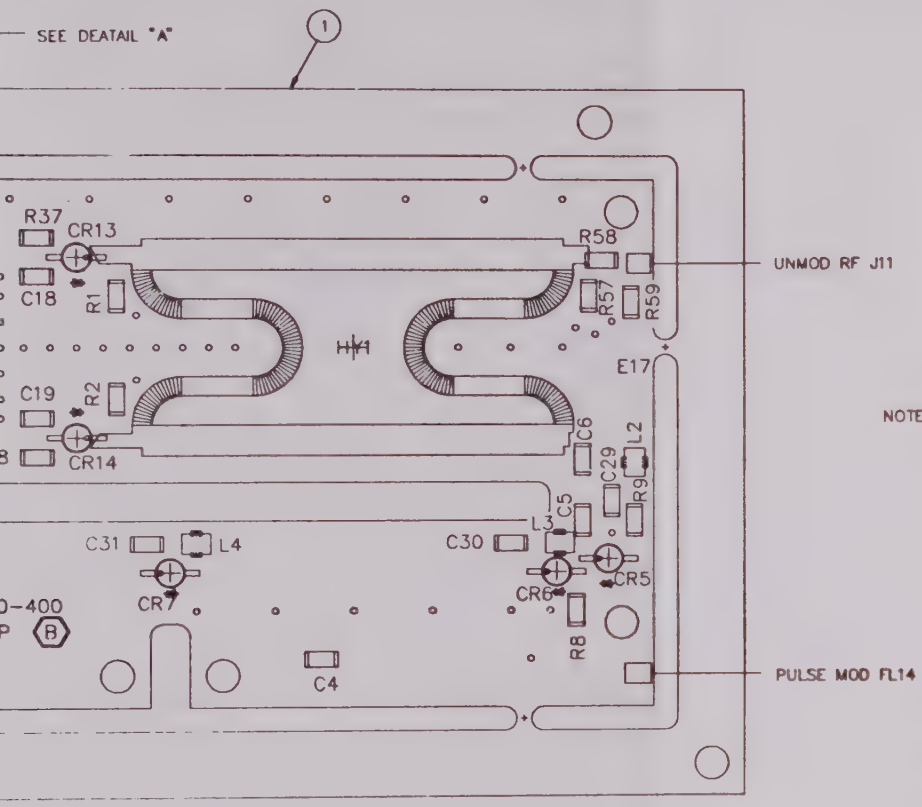

NOTES:

1. THIS PC BD ASSY CARRIES A REF DES SERIES OF 25000 (i.e,R1 IS R25001).
2. REF. SCHEM. 0000-8840-400

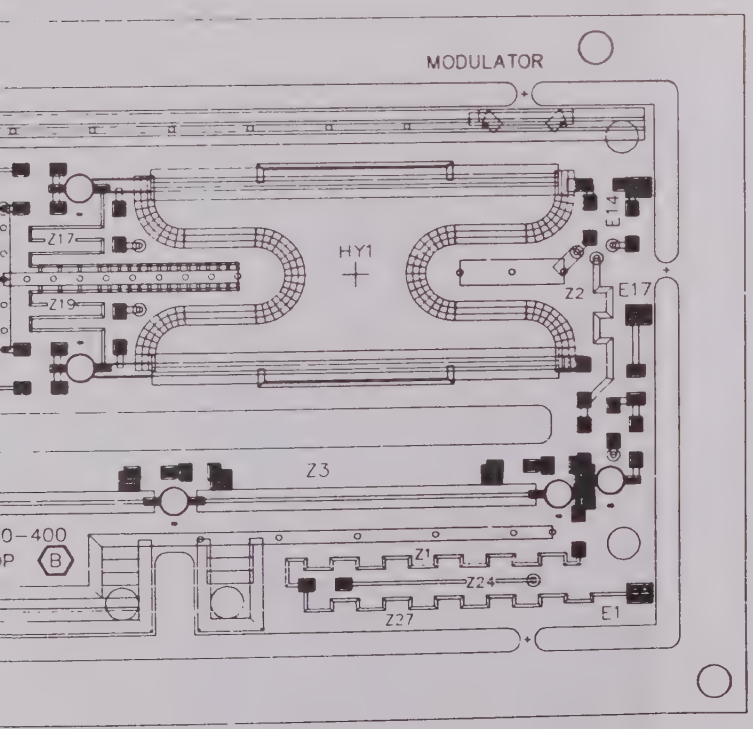

DESIGN RELEASE
NOTE TO THIS
COORDINATE
ENGINEERING
MAY 29 1991

CAUTION:
CONTAINS PARTS AND ASSEMBLIES SUSCEPTIBLE TO DAMAGE BY ELECTROSTATIC DISCHARGE (ESD).

	IFR SYSTEMS INC 10200 West York St., Wichita, Kansas 67215
DRAWN: SIGLER 4-17-90	TITLE: PCB ASSEMBLY, MODULATOR
CHECKED: R CRAWFORD 5-21-91	
APPROVED: P.R. HARRIS 5-23-91	SIZE: D · DWG. NO. 7010-8830-400 · REV B
	SCALE 3:1 · DO NOT SCALE · FSCM 51190 · SHEET 1 OF 1

PRINT DATE 91/06/19 BILL OF MATERIAL LISTED BY REF. DESIG. PAGE 1

ASSY NO.	REVISION	DESCRIPTION	LAST ECN	DATE INC
7010-8830-400	B	PCB ASSY,MODULATOR		10/30/71

STAT	REF.DES.	QTY	COMP. PART NO.	DESCRIPTION	EFFECTIVE
ACT	*01	1.00	1700-8820-400	PC BD,MODULATOR	00/00/00
ACT	*02	1.00	2400-7856-800	LABEL,ESD	00/00/00
ACT	C25001	44.00	0002-0000-000	*** REF DESIG NOT USED ***	00/00/00
ACT	C25002	-.--	0002-0000-000	*** REF DESIG NOT USED ***	00/00/00
ACT	C25003	-.--	0002-0000-000	*** REF DESIG NOT USED ***	00/00/00
ACT	C25004	8.00	1622-0030-001	CAP, PF 3.0, 50V CHIP *	00/00/00
ACT	C25005	-.--	1622-0030-001	CAP, PF 3.0, 50V CHIP *	00/00/00
ACT	C25006	-.--	1622-0030-001	CAP, PF 3.0, 50V CHIP *	00/00/00
ACT	C25007	7.00	1622-0050-001	CAP, pF 5.0 50V CHIP *	00/00/00
ACT	C25008	-.--	1622-0030-001	CAP, PF 3.0, 50V CHIP *	00/00/00
ACT	C25009	2.00	1622-0159-001	CAP, PF 1.5, 50V, CHIP NPO *	00/00/00
ACT	C25010	-.--	1622-0159-001	CAP, PF 1.5, 50V, CHIP NPO *	00/00/00
ACT	C25011	-.--	1622-0030-001	CAP, PF 3.0, 50V CHIP *	00/00/00
ACT	C25012	-.--	1622-0050-001	CAP, pF 5.0 50V CHIP *	00/00/00
ACT	C25013	3.00	1621-0106-016	CAP, UF 10, 16V, TANT SMD *	00/00/00
ACT	C25014	-.--	0002-0000-000	*** REF DESIG NOT USED ***	00/00/00
ACT	C25015	2.00	1622-0104-001	CAP, UF .1, 50V, CHIP X7R *	00/00/00
ACT	C25016	-.--	0002-0000-000	*** REF DESIG NOT USED ***	00/00/00
ACT	C25017	-.--	1621-0106-016	CAP, UF 10, 16V, TANT SMD *	00/00/00
ACT	C25018	2.00	1622-0399-001	CAP,pF 3.9 100V CHIP *	00/00/00
ACT	C25019	-.--	1622-0399-001	CAP,pF 3.9 100V CHIP *	00/00/00
ACT	C25020	-.--	1622-0030-001	CAP, PF 3.0, 50V CHIP *	00/00/00
ACT	C25021	-.--	1621-0106-016	CAP, UF 10, 16V, TANT SMD *	00/00/00
ACT	C25022	-.--	1622-0030-001	CAP, PF 3.0, 50V CHIP *	00/00/00
ACT	C25023	-.--	1622-0050-001	CAP, pF 5.0 50V CHIP *	00/00/00
ACT	C25024	-.--	0002-0000-000	*** REF DESIG NOT USED ***	00/00/00

ASSY NO. 7010-8830-400 | REVISION B | DESCRIPTION PCB ASSY,MODULATOR | LAST ECN | DATE INC 10/30/71

STAT	REF.DES.	QTY	COMP. PART NO.	DESCRIPTION	EFFECTIVE
ACT	C25025	-.--	0002-0000-000	*** REF DESIG NOT USED ***	00/0[illegible]00
ACT	C25026	-.--	1622-0030-001	CAP, PF 3.0, 50V CHIP *	00/0[illegible]00
ACT	C25027	-.--	1622-0104-001	CAP, UF .1, 50V, CHIP X7R *	00/0[illegible]00
ACT	C25028	1.00	1550-0101-510	CAP,VAR .5-2.5 PF, 9402-0	00/00/[illegible]
ACT	C25029	-.--	1622-0050-001	CAP, pF 5.0 50V CHIP *	00/00/[illegible]
ACT	C25030	-.--	1622-0050-001	CAP, pF 5.0 50V CHIP *	00/00/00
ACT	C25031	-.--	1622-0050-001	CAP, pF 5.0 50V CHIP *	00/00/00
ACT	C25032	-.--	1622-0050-001	CAP, pF 5.0 50V CHIP *	00/00/00
ACT	CR25001	-.--	0002-0000-000	*** REF DESIG NOT USED ***	00/00/00
ACT	CR25002	-.--	0002-0000-000	*** REF DESIG NOT USED ***	00/00/00
ACT	CR25003	-.--	0002-0000-000	*** REF DESIG NOT USED ***	00/00/00
ACT	CR25004	-.--	0002-0000-000	*** REF DESIG NOT USED ***	00/00/00
ACT	CR25005	4.00	4828-0000-009	DIODE,PIN 0.2pF 30V SMD *	00/00/00
ACT	CR25006	-.--	4828-0000-009	DIODE,PIN 0.2pF 30V SMD *	00/00/00
ACT	CR25007	-.--	4828-0000-009	DIODE,PIN 0.2pF 30V SMD *	00/00/00
ACT	CR25008	-.--	4828-0000-009	DIODE,PIN 0.2pF 30V SMD *	00/00/00
ACT	CR25009	3.00	4816-0000-005	DIODE, HSMS-2800, SOT-23	00/00/00
ACT	CR25010	2.00	4818-0000-025	DIODE,1S2836,H/S SWITCHING	00/00/00
ACT	CR25011	-.--	4816-0000-005	DIODE, HSMS-2800, SOT-23	00/00/00
ACT	CR25012	-.--	4818-0000-025	DIODE,1S2836,H/S SWITCHING	00/00/00
ACT	CR25013	2.00	4828-0000-011	DIODE,AP700D-850,PIN SMD	00/00/00
ACT	CR25014	-.--	4828-0000-011	DIODE,AP700D-850,PIN SMD	00/00/00
ACT	CR25015	-.--	0002-0000-000	*** REF DESIG NOT USED ***	00/00/00
ACT	CR25016	-.--	4816-0000-005	DIODE, HSMS-2800, SOT-23	00/00/00
ACT	HY25001	26.00	0004-0000-000	*** PRINTED ELEMENT ***	00/00/00
ACT	HY25002	-.--	0004-0000-000	*** PRINTED ELEMENT ***	00/00/00

ASSY NO. 7010-8830-400 | REVISION B | DESCRIPTION PCB ASSY,MODULATOR | LAST ECN | DATE INC 10/30/71

STAT	REF.DES.	QTY	COMP. PART NO.	DESCRIPTION	EFFECTIVE
ACT	L25001	1.00	1811-0102-002	IND,SM 1.0 UH	00/00/00
ACT	L25002	1.00	1811-0330-001	IND,SMD .033uH *	00/00/00
ACT	L25003	3.00	1811-0680-001	IND,SMD .068uH *	00/00/00
ACT	L25004	-.--	1811-0680-001	IND,SMD .068uH *	00/00/00
ACT	L25005	-.--	1811-0680-001	IND,SMD .068uH *	00/00/00
ACT	Q25001	-.--	0002-0000-000	*** REF DESIG NOT USED ***	00/00/00
ACT	Q25002	-.--	0002-0000-000	*** REF DESIG NOT USED ***	00/00/00
ACT	Q25003	-.--	0002-0000-000	*** REF DESIG NOT USED ***	00/00/00
ACT	Q25004	1.00	4809-0000-020	TRANS, 3906, PNP SMD	00/00/00
ACT	Q25005	1.00	4809-0000-017	TRANS,DRIVER 1GHz FT,NPN,SO-8	00/00/00
ACT	Q25006	-.--	0002-0000-000	*** REF DESIG NOT USED ***	00/00/00
ACT	Q25007	-.--	0002-0000-000	*** REF DESIG NOT USED ***	00/00/00
ACT	Q25008	-.--	0002-0000-000	*** REF DESIG NOT USED ***	00/00/00
ACT	Q25009	1.00	4809-0000-021	TRANS, 3904, NPN SMD	00/00/00
ACT	R25001	2.00	4722-1001-001	RES, 1% 1/8W 1.0K OHM *	00/00/00
ACT	R25002	-.--	4722-1001-001	RES, 1% 1/8W 1.0K OHM *	00/00/00
ACT	R25003	-.--	0002-0000-000	*** REF DESIG NOT USED ***	00/00/00
ACT	R25004	-.--	0002-0000-000	*** REF DESIG NOT USED ***	00/00/00
ACT	R25005	-.--	0002-0000-000	*** REF DESIG NOT USED ***	00/00/00
ACT	R25006	-.--	0002-0000-000	*** REF DESIG NOT USED ***	00/00/00
ACT	R25007	-.--	0002-0000-000	*** REF DESIG NOT USED ***	00/00/00
ACT	R25008	4.00	4722-4759-001	RES, 1% 1/8W 47.5 OHM *	00/00/00
ACT	R25009	2.00	4722-3929-001	RES, 1% 1/8W 39.2 OHM *	00/00/00
ACT	R25010	-.--	0002-0000-000	*** REF DESIG NOT USED ***	00/00/00
ACT	R25011	4.00	4722-5629-001	RES, 1% 1/8W 56.2 OHM *	00/00/00
ACT	R25012	2.00	4722-6818-001	RES, 1% 1/8W 6.81 OHM *	00/00/00

ASSY NO.	REVISION	DESCRIPTION	LAST ECN	DATE INC
7010-8830-400	B	PCB ASSY,MODULATOR		10/30/71

STAT	REF.DES.	QTY	COMP. PART NO.	DESCRIPTION			EFFECTIVE
ACT	R25013	3.00	4722-2210-001	RES, 1% 1/8W	221	OHM *	00/00/00
ACT	R25014	2.00	4722-1829-001	RES, 1% 1/8W	18.2	OHM *	00/00/00
ACT	R25015	-.--	4722-3929-001	RES, 1% 1/8W	39.2	OHM *	00/00/00
ACT	R25016	-.--	4722-5629-001	RES, 1% 1/8W	56.2	OHM *	00/00/00
ACT	R25017	2.00	4722-5119-001	RES, 1% 1/8W	51.1	OHM *	00/00/00
ACT	R25018	1.00	4722-1501-001	RES, 1% 1/8W	1.50K	OHM *	00/00/00
ACT	R25019	2.00	4722-2212-001	RES, 1% 1/8W	22.1K	OHM *	00/00/00
ACT	R25020	1.00	4722-2740-001	RES, 1% 1/8W	274	OHM *	00/00/00
ACT	R25021	1.00	4722-6810-001	RES, 1% 1/8W	681	OHM *	00/00/00
ACT	R25022	1.00	4722-1500-001	RES, 1% 1/8W	150	OHM *	00/00/00
ACT	R25023	1.00	4722-7500-001	RES, 1% 1/8W	750	OHM *	00/00/00
ACT	R25024	1.00	4722-1212-001	RES, 1% 1/8W	12.1K	OHM *	00/00/00
ACT	R25025	-.--	4722-2212-001	RES, 1% 1/8W	22.1K	OHM *	00/00/00
ACT	R25026	3.00	4722-1002-001	RES, 1% 1/8W	10.0K	OHM *	00/00/00
ACT	R25027	-.--	4722-2210-001	RES, 1% 1/8W	221	OHM *	00/00/00
ACT	R25028	-.--	4722-1002-001	RES, 1% 1/8W	10.0K	OHM *	00/00/00
ACT	R25029	1.00	4722-1009-001	RES, 1% 1/8W	10.0	OHM *	00/00/00
ACT	R25030	1.00	4722-2219-001	RES, 1% 1/8W	22.1	OHM *	00/00/00
ACT	R25031	1.00	4722-1004-001	RES, 1% 1/8W	1.0M	OHM *	00/00/00
ACT	R25032	-.--	4722-5119-001	RES, 1% 1/8W	51.1	OHM *	00/00/00
ACT	R25033	-.--	0002-0000-000	*** REF DESIG NOT USED ***			00/00/00
ACT	R25034	-.--	0002-0000-000	*** REF DESIG NOT USED ***			00/00/00
ACT	R25035	-.--	0002-0000-000	*** REF DESIG NOT USED ***			00/00/00
ACT	R25036	-.--	0002-0000-000	*** REF DESIG NOT USED ***			00/00/00
ACT	R25037	-.--	4722-4759-001	RES, 1% 1/8W	47.5	OHM *	00/00/00
ACT	R25038	-.--	4722-4759-001	RES, 1% 1/8W	47.5	OHM *	00/00/00

ASSY NO. 7010-8830-400 | REVISION B | DESCRIPTION PCB ASSY,MODULATOR | LAST ECN | DATE INC 10/30/71

STAT	REF.DES.	QTY	COMP. PART NO.	DESCRIPTION	EFFECTIVE
ACT	R25039	-.--	0002-0000-000	*** REF DESIG NOT USED ***	00/00/00
ACT	R25040	-.--	4722-4759-001	RES, 1% 1/8W 47.5 OHM *	00/00/00
ACT	R25041	-.--	0002-0000-000	*** REF DESIG NOT USED ***	00/00/00
ACT	R25042	-.--	0002-0000-000	*** REF DESIG NOT USED ***	00/00/00
ACT	R25043	-.--	0002-0000-000	*** REF DESIG NOT USED ***	00/00/00
ACT	R25044	-.--	0002-0000-000	*** REF DESIG NOT USED ***	00/00/00
ACT	R25045	-.--	0002-0000-000	*** REF DESIG NOT USED ***	00/00/00
ACT	R25046	-.--	0002-0000-000	*** REF DESIG NOT USED ***	00/00/00
ACT	R25047	-.--	0002-0000-000	*** REF DESIG NOT USED ***	00/00/00
ACT	R25048	-.--	4722-6818-001	RES, 1% 1/8W 6.81 OHM *	00/00/00
ACT	R25049	-.--	4722-2210-001	RES, 1% 1/8W 221 OHM *	00/00/00
ACT	R25050	-.--	4722-5629-001	RES, 1% 1/8W 56.2 OHM *	00/00/00
ACT	R25051	1.00	4722-2211-001	RES, 1% 1/8W 2.21K OHM *	00/00/00
ACT	R25052	-.--	4722-5629-001	RES, 1% 1/8W 56.2 OHM *	00/00/00
ACT	R25053	-.--	4722-1002-001	RES, 1% 1/8W 10.0K OHM *	00/00/00
ACT	R25054	-.--	0002-0000-000	*** REF DESIG NOT USED ***	00/00/00
ACT	R25055	-.--	0002-0000-000	*** REF DESIG NOT USED ***	00/00/00
ACT	R25056	-.--	0002-0000-000	*** REF DESIG NOT USED ***	00/00/00
ACT	R25057	2.00	4722-2741-001	RES, 1% 1/8W 2.74K OHM *	00/00/00
ACT	R25058	-.--	4722-1829-001	RES, 1% 1/8W 18.2 OHM *	00/00/00
ACT	R25059	-.--	4722-2741-001	RES, 1% 1/8W 2.74K OHM *	00/00/00
ACT	TP25001	-.--	0004-0000-000	*** PRINTED ELEMENT ***	00/00/00
ACT	U25001	1.00	3221-0001-001	IC,LF353,DUAL BIFET OPAMP SMD*	00/00/00
ACT	Z25001	-.--	0004-0000-000	*** PRINTED ELEMENT ***	00/00/00
ACT	Z25002	-.--	0004-0000-000	*** PRINTED ELEMENT ***	00/00/00
ACT	Z25003	-.--	0004-0000-000	*** PRINTED ELEMENT ***	00/00/00

ASSY NO.	REVISION	DESCRIPTION	LAST ECN	DATE INC
7010-8830-400	B	PCB ASSY,MODULATOR		10/30/71

STAT	REF.DES.	QTY	COMP. PART NO.	DESCRIPTION	EFFECTIVE
ACT	Z25004	-.--	0004-0000-000	*** PRINTED ELEMENT ***	00/00/00
ACT	Z25005	-.--	0002-0000-000	*** REF DESIG NOT USED ***	00/00/00
ACT	Z25006	-.--	0004-0000-000	*** PRINTED ELEMENT ***	00/00/00
ACT	Z25007	-.--	0004-0000-000	*** PRINTED ELEMENT ***	00/00/00
ACT	Z25008	-.--	0004-0000-000	*** PRINTED ELEMENT ***	00/00/00
ACT	Z25009	-.--	0004-0000-000	*** PRINTED ELEMENT ***	00/00/00
ACT	Z25010	-.--	0004-0000-000	*** PRINTED ELEMENT ***	00/00/00
ACT	Z25011	-.--	0004-0000-000	*** PRINTED ELEMENT ***	00/00/00
ACT	Z25012	-.--	0004-0000-000	*** PRINTED ELEMENT ***	00/00/00
ACT	Z25013	-.--	0002-0000-000	*** REF DESIG NOT USED ***	00/00/00
ACT	Z25014	-.--	0004-0000-000	*** PRINTED ELEMENT ***	00/00/00
ACT	Z25015	-.--	0004-0000-000	*** PRINTED ELEMENT ***	00/00/00
ACT	Z25016	-.--	0002-0000-000	*** REF DESIG NOT USED ***	00/00/00
ACT	Z25017	-.--	0004-0000-000	*** PRINTED ELEMENT ***	00/00/00
ACT	Z25018	-.--	0002-0000-000	*** REF DESIG NOT USED ***	00/00/00
ACT	Z25019	-.--	0004-0000-000	*** PRINTED ELEMENT ***	00/00/00
ACT	Z25020	-.--	0002-0000-000	*** REF DESIG NOT USED ***	00/00/00
ACT	Z25021	-.--	0004-0000-000	*** PRINTED ELEMENT ***	00/00/00
ACT	Z25022	-.--	0004-0000-000	*** PRINTED ELEMENT ***	00/00/00
ACT	Z25023	-.--	0004-0000-000	*** PRINTED ELEMENT ***	00/00/00
ACT	Z25024	-.--	0004-0000-000	*** PRINTED ELEMENT ***	00/00/00
ACT	Z25025	-.--	0004-0000-000	*** PRINTED ELEMENT ***	00/00/00
ACT	Z25026	-.--	0004-0000-000	*** PRINTED ELEMENT ***	00/00/00
ACT	Z25027	-.--	0004-0000-000	*** PRINTED ELEMENT ***	00/00/00
ACT	Z25028	-.--	0004-0000-000	*** PRINTED ELEMENT ***	00/00/00

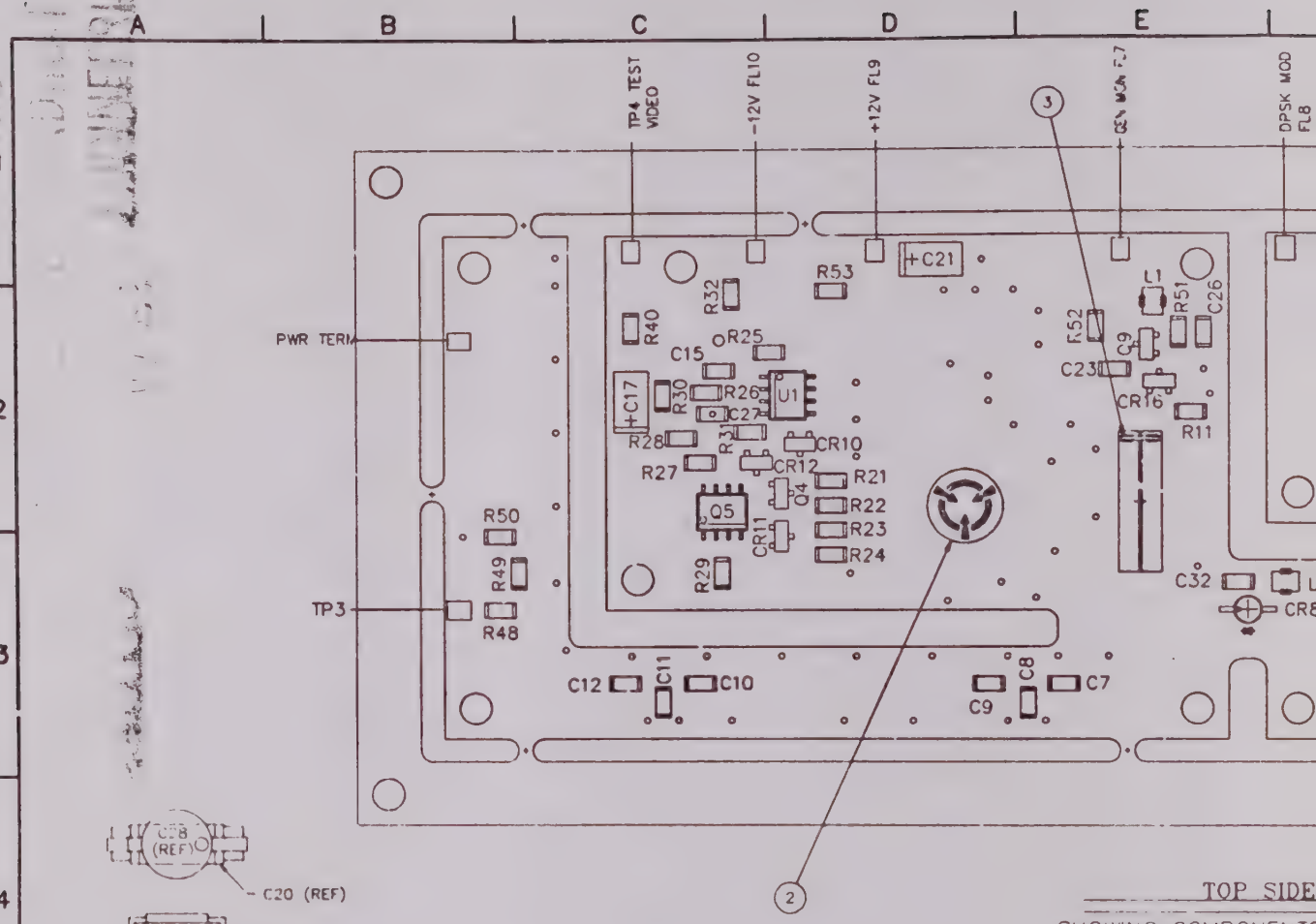
A
B
C
D
E
1
2
3
4
5
6
7
TP4 TEST VIDEO
-12V FL10
+12V FL9
DPSK MOD FL8
PWR TERM
TP3
+C21
R53
R32
R40
R25
C15
R30
R26
C27
+C17
U1
R28
R31
CR10
R27
CR12
R21
Q4
Q5
R22
R23
R24
CR11
R29
R50
R49
R48
C12
C11
C10
C8
C9
C7
R52
C1
R51
C26
C9
C23
CR16
R11
C32
CR8
2
3
TOP SIDE
SHOWING COMPONENTS
C18 (REF)
C20 (REF)
DETAIL "A"
SCALE NONE
E11
E12
E16
E15
E6
E5
E4
TP1
Z15
Z14
Z6
Z7
Z10
Z8
Z12
Z11
Z9
TOP SIDE
SHOWING PADS AN

DATE	REV	CHANGE	APPD
6691	B	DESIGN RELEASE	SL

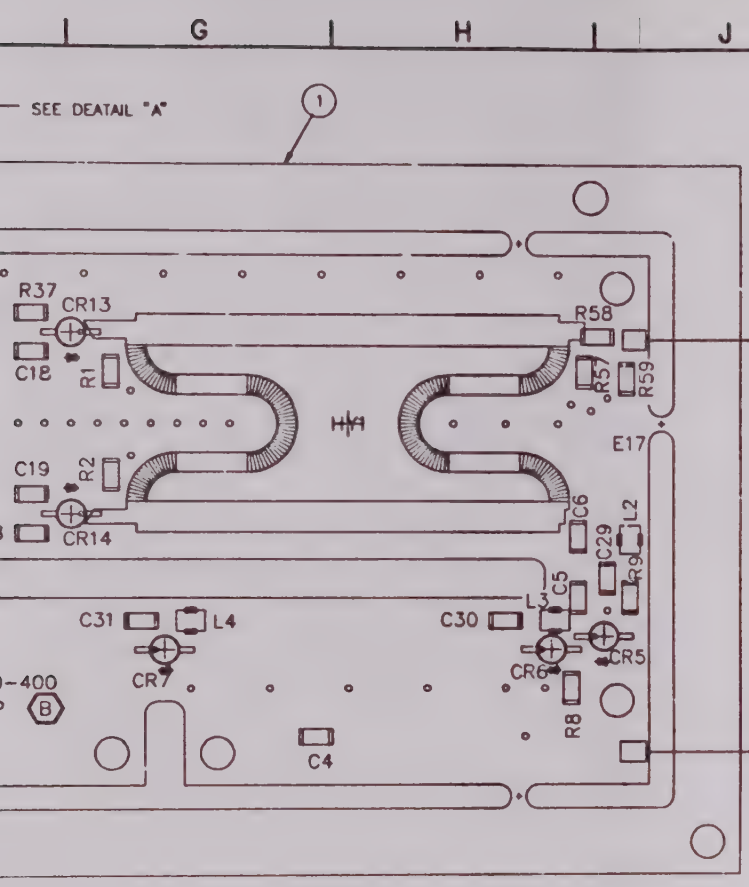

NOTES:

1. THIS PC BD ASSY CARRIES A REF DES SERIES OF 25000 (I.e,R1 IS R25001).
2. REFERENCE SCHEMATIC: 0000-8840-800

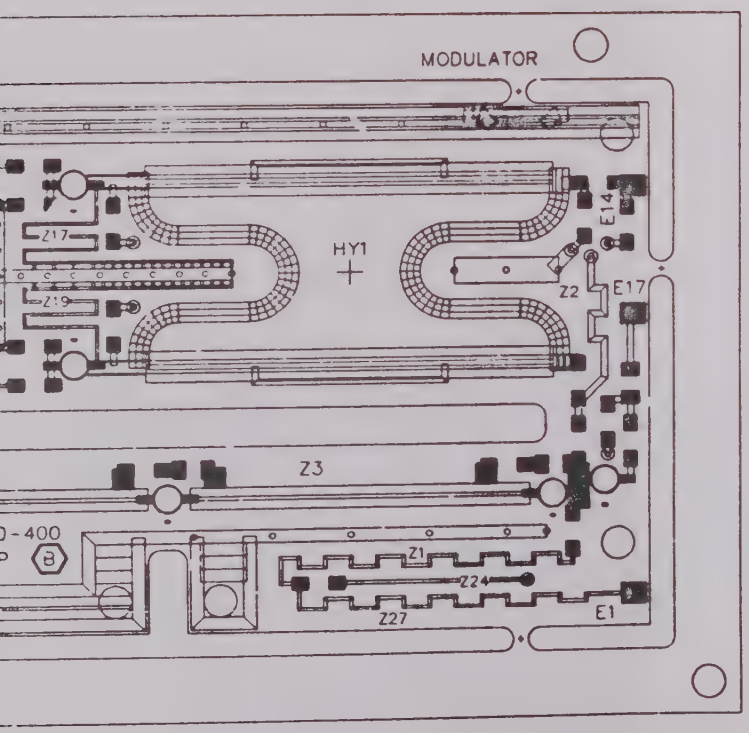

CAUTION:
CONTAINS PARTS AND ASSEMBLIES SUSCEPTIBLE TO DAMAGE BY ELECTROSTATIC DISCHARGE (ESD).

IFR SYSTEMS INC

DRAWN	SIGLER 4-17-90
CHECKED	R CRAWFORD 6-6-91
APPROVED	P.R. HARRIS 6-6-91

PCB ASSEMBLY, MODULATOR W/MLD

SIZE D | DWG NO. 7010-8830-800 | REV B

SCALE 3:1 | SHEET 1 of 1

ASSY NO.	REVISION	DESCRIPTION	LAST ECN	DATE INC
7010-8830-800	B	PCB ASSY,MODULATOR W/MLD		10/30/71

STAT	REF.DES.	QTY	COMP. PART NO.	DESCRIPTION		EFFECTIVE
ACT	*01	1.00	1700-8820-400	PC BD,MODULATOR		00/00/00
ACT	*02	1.00	2400-7856-800	LABEL,ESD		00/00/00
ACT	*03	.01	1050-0000-073	WIRE,BUS,TINNED COPPER,22GA		00/00/00
ACT	C25001	56.00	0002-0000-000	*** REF DESIG NOT USED ***	*** QTY PER ASSY EXCEED	00/00/00
ACT	C25002	-.--	0002-0000-000	*** REF DESIG NOT USED ***		00/00/00
ACT	C25003	-.--	0002-0000-000	*** REF DESIG NOT USED ***		00/00/00
ACT	C25004	7.00	1622-0030-001	CAP, PF 3.0, 50V CHIP	*	00/00/00
ACT	C25005	-.--	1622-0030-001	CAP, PF 3.0, 50V CHIP	*	00/00/00
ACT	C25006	-.--	1622-0030-001	CAP, PF 3.0, 50V CHIP	*	00/00/00
ACT	C25007	7.00	1622-0050-001	CAP, pF 5.0 50V CHIP	*	00/00/00
ACT	C25008	-.--	1622-0030-001	CAP, PF 3.0, 50V CHIP	*	00/00/00
ACT	C25009	2.00	1622-0159-001	CAP, PF 1.5, 50V, CHIP NPO	*	00/00/00
ACT	C25010	-.--	1622-0159-001	CAP, PF 1.5, 50V, CHIP NPO	*	00/00/00
ACT	C25011	-.--	1622-0030-001	CAP, PF 3.0, 50V CHIP	*	00/00/00
ACT	C25012	-.--	1622-0050-001	CAP, pF 5.0 50V CHIP	*	00/00/00
ACT	C25013	-.--	0002-0000-000	*** REF DESIG NOT USED ***		00/00/00
ACT	C25014	-.--	0002-0000-000	*** REF DESIG NOT USED ***		00/00/00
ACT	C25015	2.00	1622-0104-001	CAP, UF .1, 50V, CHIP X7R	*	00/00/00
ACT	C25016	-.--	0002-0000-000	*** REF DESIG NOT USED ***		00/00/00
ACT	C25017	2.00	1621-0106-016	CAP, UF 10, 16V, TANT SMD	*	00/00/00
ACT	C25018	2.00	1622-0399-001	CAP,pF 3.9 100V CHIP	*	00/00/00
ACT	C25019	-.--	1622-0399-001	CAP,pF 3.9 100V CHIP	*	00/00/00
ACT	C25020	-.--	1622-0030-001	CAP, PF 3.0, 50V CHIP	*	00/00/00
ACT	C25021	-.--	1621-0106-016	CAP, UF 10, 16V, TANT SMD	*	00/00/00
ACT	C25023	-.--	1622-0050-001	CAP, pF 5.0 50V CHIP	*	00/00/00
ACT	C25024	-.--	0002-0000-000	*** REF DESIG NOT USED ***		00/00/00

ASSY NO.	REVISION	DESCRIPTION	LAST ECN	DATE INC
7010-8830-800	B	PCB ASSY,MODULATOR W/MLD		10/30/71

STAT	REF.DES.	QTY	COMP. PART NO.	DESCRIPTION	EFFECTIVE
ACT	C25025	-.--	0002-0000-000	*** REF DESIG NOT USED ***	00/00/00
ACT	C25026	-.--	1622-0030-001	CAP, PF 3.0, 50V CHIP *	00/00/00
ACT	C25027	-.--	1622-0104-001	CAP, UF .1, 50V, CHIP X7R *	00/00/00
ACT	C25028	1.00	1550-0101-510	CAP,VAR .5-2.5 PF, 9402-0	00/00/00
ACT	C25029	-.--	1622-0050-001	CAP, pF 5.0 50V CHIP *	00/00/00
ACT	C25030	-.--	1622-0050-001	CAP, pF 5.0 50V CHIP *	00/00/00
ACT	C25031	-.--	1622-0050-001	CAP, pF 5.0 50V CHIP *	00/00/00
ACT	C25032	-.--	1622-0050-001	CAP, pF 5.0 50V CHIP *	00/00/00
ACT	CR25001	-.--	0002-0000-000	*** REF DESIG NOT USED ***	00/00/00
ACT	CR25002	-.--	0002-0000-000	*** REF DESIG NOT USED ***	00/00/00
ACT	CR25003	-.--	0002-0000-000	*** REF DESIG NOT USED ***	00/00/00
ACT	CR25004	-.--	0002-0000-000	*** REF DESIG NOT USED ***	00/00/00
ACT	CR25005	4.00	4828-0000-009	DIODE,PIN 0.2pF 30V SMD *	00/00/00
ACT	CR25006	-.--	4828-0000-009	DIODE,PIN 0.2pF 30V SMD *	00/00/00
ACT	CR25007	-.--	4828-0000-009	DIODE,PIN 0.2pF 30V SMD *	00/00/00
ACT	CR25008	-.--	4828-0000-009	DIODE,PIN 0.2pF 30V SMD *	00/00/00
ACT	CR25010	2.00	4818-0000-025	DIODE,1S2836,H/S SWITCHING	00/00/00
ACT	CR25011	2.00	4816-0000-005	DIODE, HSMS-2800, SOT-23	00/00/00
ACT	CR25012	-.--	4818-0000-025	DIODE,1S2836,H/S SWITCHING	00/00/00
ACT	CR25013	2.00	4828-0000-011	DIODE,AP700D-850,PIN SMD	00/00/00
ACT	CR25014	-.--	4828-0000-011	DIODE,AP700D-850,PIN SMD	00/00/00
ACT	CR25015	-.--	0002-0000-000	*** REF DESIG NOT USED ***	00/00/00
ACT	CR25016	-.--	4816-0000-005	DIODE, HSMS-2800, SOT-23	00/00/00
ACT	HY25001	26.00	0003-0000-000	***** FOR REFERENCE ONLY *****	00/00/00
ACT	HY25002	-.--	0003-0000-000	***** FOR REFERENCE ONLY *****	00/00/00
ACT	L25001	1.00	1811-0102-002	IND,SM 1.0 UH	00/00/00

ASSY NO.	REVISION	DESCRIPTION	LAST ECN	DATE INC
7010-8830-800	B	PCB ASSY,MODULATOR W/MLD		10/30/71

STAT	REF.DES.	QTY	COMP. PART NO.	DESCRIPTION	EFFECTIVE
ACT	L25002	1.00	1811-0330-001	IND,SMD .033uH *	00/00/00
ACT	L25003	3.00	1811-0680-001	IND,SMD .068uH *	00/00/00
ACT	L25004	-.--	1811-0680-001	IND,SMD .068uH *	00/00/00
ACT	L25005	-.--	1811-0680-001	IND,SMD .068uH *	00/00/00
ACT	Q25001	-.--	0002-0000-000	*** REF DESIG NOT USED ***	00/00/00
ACT	Q25002	-.--	0002-0000-000	*** REF DESIG NOT USED ***	00/00/00
ACT	Q25003	-.--	0002-0000-000	*** REF DESIG NOT USED ***	00/00/00
ACT	Q25004	1.00	4809-0000-020	TRANS, 3906, PNP SMD	00/00/00
ACT	Q25005	1.00	4809-0000-017	TRANS,DRIVER 1GHz FT,NPN,SO-8	00/00/00
ACT	Q25006	-.--	0002-0000-000	*** REF DESIG NOT USED ***	00/00/00
ACT	Q25007	-.--	0002-0000-000	*** REF DESIG NOT USED ***	00/00/00
ACT	Q25008	-.--	0002-0000-000	*** REF DESIG NOT USED ***	00/00/00
ACT	Q25009	1.00	4809-0000-021	TRANS, 3904, NPN SMD	00/00/00
ACT	R25001	2.00	4722-1001-001	RES, 1% 1/8W 1.0K OHM *	00/00/00
ACT	R25002	-.--	4722-1001-001	RES, 1% 1/8W 1.0K OHM *	00/00/00
ACT	R25003	-.--	0002-0000-000	*** REF DESIG NOT USED ***	00/00/00
ACT	R25004	-.--	0002-0000-000	*** REF DESIG NOT USED ***	00/00/00
ACT	R25005	-.--	0002-0000-000	*** REF DESIG NOT USED ***	00/00/00
ACT	R25006	-.--	0002-0000-000	*** REF DESIG NOT USED ***	00/00/00
ACT	R25007	-.--	0002-0000-000	*** REF DESIG NOT USED ***	00/00/00
ACT	R25008	4.00	4722-4759-001	RES, 1% 1/8W 47.5 OHM *	00/00/00
ACT	R25009	1.00	4722-3929-001	RES, 1% 1/8W 39.2 OHM *	00/00/00
ACT	R25010	-.--	0002-0000-000	*** REF DESIG NOT USED ***	00/00/00
ACT	R25011	2.00	4722-5629-001	RES, 1% 1/8W 56.2 OHM *	00/00/00
ACT	R25012	-.--	0002-0000-000	*** REF DESIG NOT USED ***	00/00/00
ACT	R25013	-.--	0002-0000-000	*** REF DESIG NOT USED ***	00/00/00

ASSY NO.	REVISION	DESCRIPTION	LAST ECN	DATE INC
7010-8830-800	B	PCB ASSY,MODULATOR W/MLD		10/30/71

STAT	REF.DES.	QTY	COMP. PART NO.	DESCRIPTION	EFFECTIVE
ACT	R25014	-.--	0002-0000-000	*** REF DESIG NOT USED ***	00/00/00
ACT	R25015	-.--	0002-0000-000	*** REF DESIG NOT USED ***	00/00/00
ACT	R25016	-.--	0002-0000-000	*** REF DESIG NOT USED ***	00/00/00
ACT	R25017	-.--	0002-0000-000	*** REF DESIG NOT USED ***	00/00/00
ACT	R25018	-.--	0002-0000-000	*** REF DESIG NOT USED ***	00/00/00
ACT	R25019	-.--	0002-0000-000	*** REF DESIG NOT USED ***	00/00/00
ACT	R25020	-.--	0002-0000-000	*** REF DESIG NOT USED ***	00/00/00
ACT	R25021	1.00	4722-6810-001	RES, 1% 1/8W 681 OHM *	00/00/00
ACT	R25022	2.00	4722-1500-001	RES, 1% 1/8W 150 OHM *	00/00/00
ACT	R25023	1.00	4722-7500-001	RES, 1% 1/8W 750 OHM *	00/00/00
ACT	R25024	1.00	4722-1212-001	RES, 1% 1/8W 12.1K OHM *	00/00/00
ACT	R25025	1.00	4722-2212-001	RES, 1% 1/8W 22.1K OHM *	00/00/00
ACT	R25026	3.00	4722-1002-001	RES, 1% 1/8W 10.0K OHM *	00/00/00
ACT	R25027	1.00	4722-2210-001	RES, 1% 1/8W 221 OHM *	00/00/00
ACT	R25028	-.--	4722-1002-001	RES, 1% 1/8W 10.0K OHM *	00/00/00
ACT	R25029	1.00	4722-1009-001	RES, 1% 1/8W 10.0 OHM *	00/00/00
ACT	R25030	1.00	4722-2219-001	RES, 1% 1/8W 22.1 OHM *	00/00/00
ACT	R25031	1.00	4722-1004-001	RES, 1% 1/8W 1.0M OHM *	00/00/00
ACT	R25032	1.00	4722-5119-001	RES, 1% 1/8W 51.1 OHM *	00/00/00
ACT	R25033	-.--	0002-0000-000	*** REF DESIG NOT USED ***	00/00/00
ACT	R25034	-.--	0002-0000-000	*** REF DESIG NOT USED ***	00/00/00
ACT	R25035	-.--	0002-0000-000	*** REF DESIG NOT USED ***	00/00/00
ACT	R25036	-.--	0002-0000-000	*** REF DESIG NOT USED ***	00/00/00
ACT	R25037	-.--	4722-4759-001	RES, 1% 1/8W 47.5 OHM *	00/00/00
ACT	R25038	-.--	4722-4759-001	RES, 1% 1/8W 47.5 OHM *	00/00/00
ACT	R25039	-.--	0002-0000-000	*** REF DESIG NOT USED ***	00/00/00

ASSY NO.	REVISION	DESCRIPTION	LAST ECN	DATE INC
7010-8830-800	B	PCB ASSY,MODULATOR W/MLD		10/30/71

STAT	REF.DES.	QTY	COMP. PART NO.	DESCRIPTION	EFFECTIVE
ACT	R25040	-.--	4722-4759-001	RES, 1% 1/8W 47.5 OHM *	00/00/00
ACT	R25041	-.--	0002-0000-000	*** REF DESIG NOT USED ***	00/00/00
ACT	R25042	-.--	0002-0000-000	*** REF DESIG NOT USED ***	00/00/00
ACT	R25043	-.--	0002-0000-000	*** REF DESIG NOT USED ***	00/00/00
ACT	R25044	-.--	0002-0000-000	*** REF DESIG NOT USED ***	00/00/00
ACT	R25045	-.--	0002-0000-000	*** REF DESIG NOT USED ***	00/00/00
ACT	R25046	-.--	0002-0000-000	*** REF DESIG NOT USED ***	00/00/00
ACT	R25047	-.--	0002-0000-000	*** REF DESIG NOT USED ***	00/00/00
ACT	R25048	2.00	4722-1829-001	RES, 1% 1/8W 18.2 OHM *	00/00/00
ACT	R25049	-.--	4722-1500-001	RES, 1% 1/8W 150 OHM *	00/00/00
ACT	R25050	1.00	4722-6819-001	RES, 1% 1/8W 68.1 OHM *	00/00/00
ACT	R25051	1.00	4722-2211-001	RES, 1% 1/8W 2.21K OHM *	00/00/00
ACT	R25052	-.--	4722-5629-001	RES, 1% 1/8W 56.2 OHM *	00/00/00
ACT	R25053	-.--	4722-1002-001	RES, 1% 1/8W 10.0K OHM *	00/00/00
ACT	R25054	-.--	0002-0000-000	*** REF DESIG NOT USED ***	00/00/00
ACT	R25055	-.--	0002-0000-000	*** REF DESIG NOT USED ***	00/00/00
ACT	R25056	-.--	0002-0000-000	*** REF DESIG NOT USED ***	00/00/00
ACT	R25057	2.00	4722-2741-001	RES, 1% 1/8W 2.74K OHM *	00/00/00
ACT	R25058	-.--	4722-1829-001	RES, 1% 1/8W 18.2 OHM *	00/00/00
ACT	R25059	-.--	4722-2741-001	RES, 1% 1/8W 2.74K OHM *	00/00/00
ACT	TP25001	-.--	0003-0000-000	***** FOR REFERENCE ONLY *****	00/00/00
ACT	U25001	1.00	3221-0001-001	IC,LF353,DUAL BIFET OPAMP SMD*	00/00/00
ACT	Z25001	-.--	0003-0000-000	***** FOR REFERENCE ONLY *****	00/00/00
ACT	Z25002	-.--	0003-0000-000	***** FOR REFERENCE ONLY *****	00/00/00
ACT	Z25003	-.--	0003-0000-000	***** FOR REFERENCE ONLY *****	00/00/00
ACT	Z25004	-.--	0003-0000-000	***** FOR REFERENCE ONLY *****	00/00/00

ASSY NO.	REVISION	DESCRIPTION	LAST ECN	DATE INC
7010-8830-800	B	PCB ASSY,MODULATOR W/MLD		10/30/71

STAT	REF.DES.	QTY	COMP. PART NO.	DESCRIPTION	EFFECTIVE
ACT	Z25005	-.--	0002-0000-000	*** REF DESIG NOT USED ***	00/00/00
ACT	Z25006	-.--	0003-0000-000	***** FOR REFERENCE ONLY *****	00/00/00
ACT	Z25007	-.--	0003-0000-000	***** FOR REFERENCE ONLY *****	00/00/00
ACT	Z25008	-.--	0003-0000-000	***** FOR REFERENCE ONLY *****	00/00/00
ACT	Z25009	-.--	0003-0000-000	***** FOR REFERENCE ONLY *****	00/00/00
ACT	Z25010	-.--	0003-0000-000	***** FOR REFERENCE ONLY *****	00/00/00
ACT	Z25011	-.--	0003-0000-000	***** FOR REFERENCE ONLY *****	00/00/00
ACT	Z25012	-.--	0003-0000-000	***** FOR REFERENCE ONLY *****	00/00/00
ACT	Z25013	-.--	0002-0000-000	*** REF DESIG NOT USED ***	00/00/00
ACT	Z25014	-.--	0003-0000-000	***** FOR REFERENCE ONLY *****	00/00/00
ACT	Z25015	-.--	0003-0000-000	***** FOR REFERENCE ONLY *****	00/00/00
ACT	Z25016	-.--	0002-0000-000	*** REF DESIG NOT USED ***	00/00/00
ACT	Z25017	-.--	0003-0000-000	***** FOR REFERENCE ONLY *****	00/00/00
ACT	Z25018	-.--	0002-0000-000	*** REF DESIG NOT USED ***	00/00/00
ACT	Z25019	-.--	0003-0000-000	***** FOR REFERENCE ONLY *****	00/00/00
ACT	Z25020	-.--	0002-0000-000	*** REF DESIG NOT USED ***	00/00/00
ACT	Z25021	-.--	0003-0000-000	***** FOR REFERENCE ONLY *****	00/00/00
ACT	Z25022	-.--	0003-0000-000	***** FOR REFERENCE ONLY *****	00/00/00
ACT	Z25023	-.--	0003-0000-000	***** FOR REFERENCE ONLY *****	00/00/00
ACT	Z25024	-.--	0003-0000-000	***** FOR REFERENCE ONLY *****	00/00/00
ACT	Z25025	-.--	0003-0000-000	***** FOR REFERENCE ONLY *****	00/00/00
ACT	Z25026	-.--	0003-0000-000	***** FOR REFERENCE ONLY *****	00/00/00
ACT	Z25027	-.--	0003-0000-000	***** FOR REFERENCE ONLY *****	00/00/00
ACT	Z25028	-.--	0003-0000-000	***** FOR REFERENCE ONLY *****	00/00/00

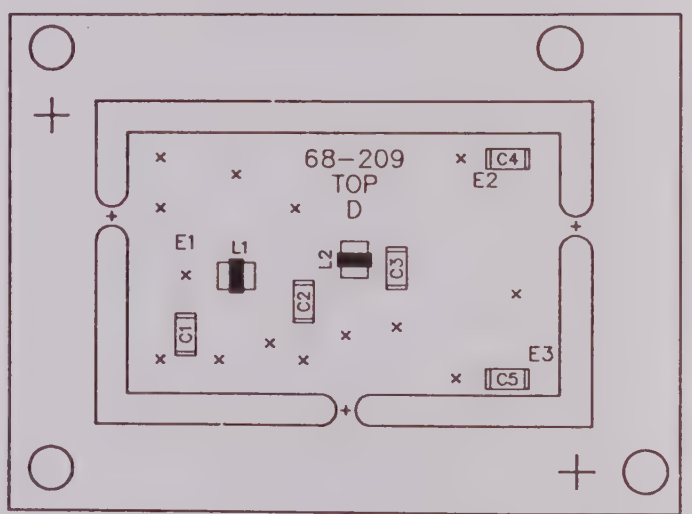
68-209
TOP
D
C4
E2
E1
L1
L2
C3
C2
C1
E3
C5

E F G

DATE	REV	CHANGE	APVD
4/15/88	B	DESIGN RELEASE	CKM
7/29/88	B	PROD REL PER ECN 11475 JR	SLR
5/19/89	C	INC ECN 12309 SCP	DC
6/4/90	D	INC ECN 13331 BP	SCP
6/10/91	D1	INC ECN 14163 BP	BP
7/15/91	D2	INC ECN 14227 BP	BP

NOTES:

1. ALL REFERENCE DESIGNATORS CARRY AN ASSIGNED DESIGNATOR SERIES, THIS DWG CARRIES 29000 (i.e., R1 IS R29001).
2. S-1403: REF. SCHEM. 0000-6840-600.
   S-1403C: REF. SCHEM. 0000-8840-400.
   S-1403C W/MLD: REF. SCHEM. 0000-8840-800.

	ICR SYSTEMS INC 10 West York St., Wichita, Kansas 67213
DRAWN DATE: WAW 3/31/88	TITLE: PCB ASSEMBLY VIDEO FILTER
CHECKED DATE: ROCK CRAWFORD 4/15/88	
APPROVED DATE: P.R. HARRIS 4/15/88	SIZE: C; DWG. NO.: 7010-6830-900; REV: D1
	SCALE: 3:1; DO NOT SCALE; FSCM 51190; SHEET 1 OF 1

ASSY NO.	REVISION	DESCRIPTION	LAST ECN	DATE INC
7010-6830-900	D	PCB, ASSY,VIDEO FILTER	13331	05/22/90

STAT	REF.DES.	QTY	COMP. PART NO.	DESCRIPTION	EFFECTIVE
ACT	*01	1.00	1700-6820-900	PC BD, VIDEO FILTER	00/00/00
ACT	*U12002	.00	3271-6701-210	IC,27512, I1402 CPU V2.10	00/00/00
ACT	C29001	2.00	1622-0560-001	CAP,PF 56 50V,CHIP	00/00/00
ACT	C29002	1.00	1622-0101-001	CAP,pF 100, 50V CHIP *	00/00/00
ACT	C29003	-.--	1622-0560-001	CAP,PF 56 50V,CHIP	00/00/00
ACT	C29004	2.00	1622-0100-001	CAP,PF 10 50V CHIP	00/00/00
ACT	C29005	-.--	1622-0100-001	CAP,PF 10 50V CHIP	00/00/00
ACT	L29001	2.00	1811-0221-001	IND., .22uh, 1008CS-221, SM	00/00/00
ACT	L29002	-.--	1811-0221-001	IND., .22uh, 1008CS-221, SM	00/00/00

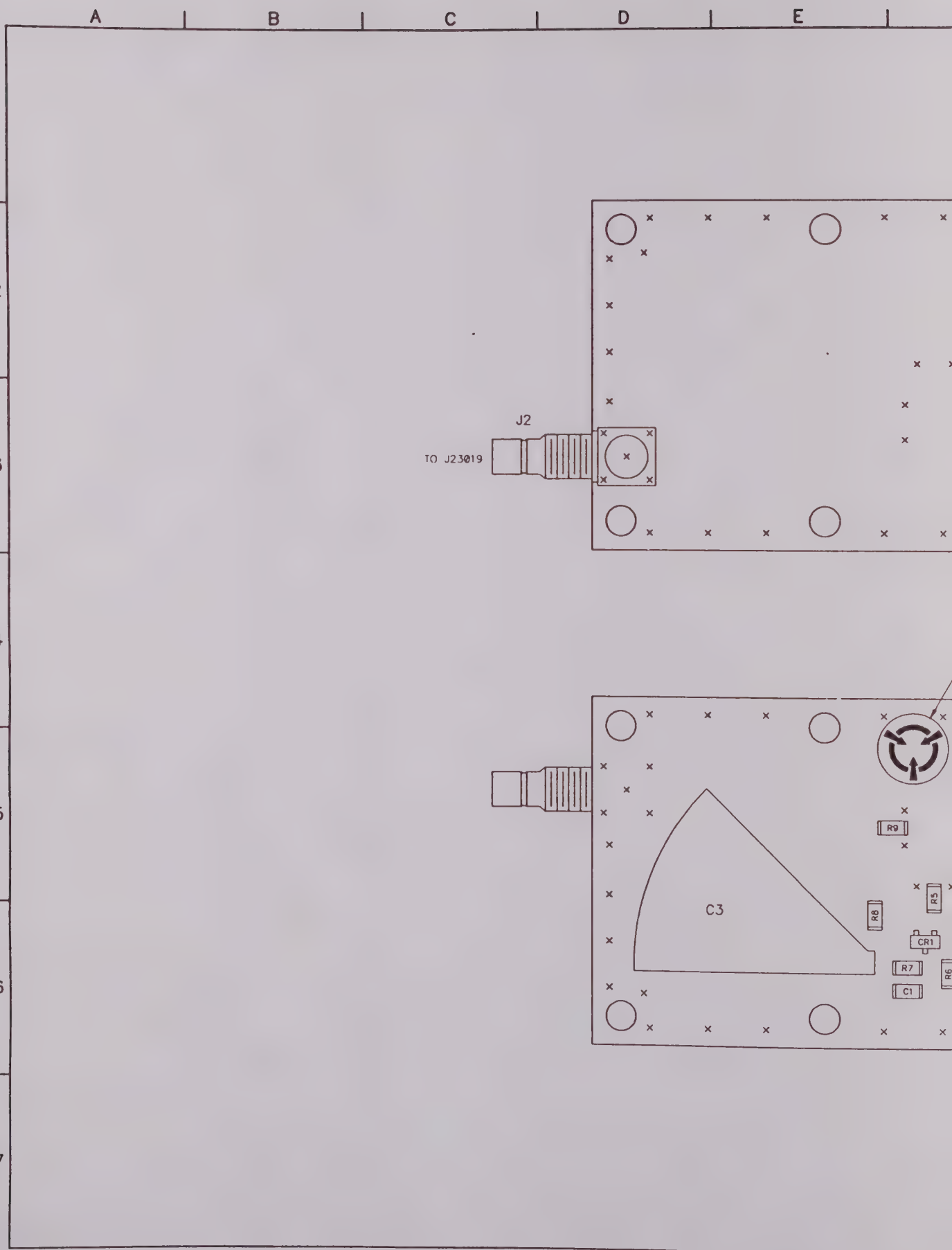
A
B
C
D
E
1
2
3
4
5
6
7
J2
TO J23019
C3
R9
R8
R5
CR1
R7
C1
R6

G	H	J	K	L

DATE	REV	CHANGE	APPD
5-13-91	C	DESIGN RELEASE	SL
10-2-91	C1	INC REF #L107 WAW	SL

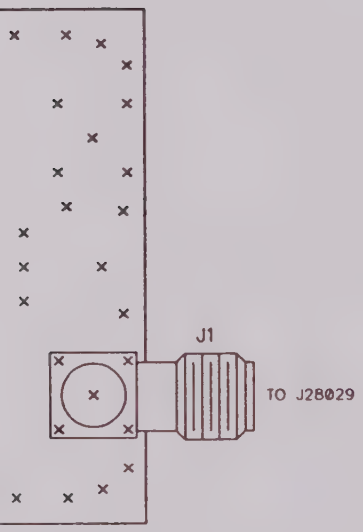

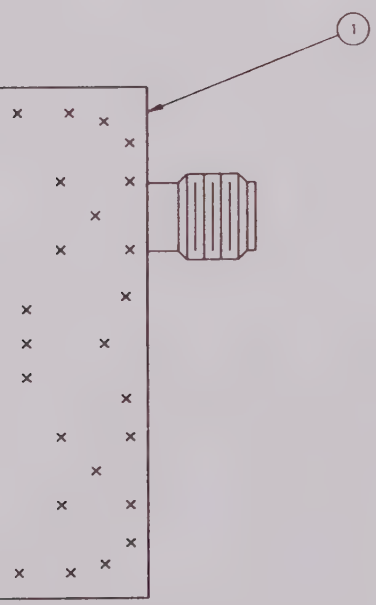

NOTES:

1. ALL REFERENCE DESIGNATORS CARRY AN ASSIGNED DESIGNATOR SERIES, THIS DWG. CARRIES SERIES 13000 (i.e., R1 IS R13001).
2. REF SCHEM: 0000-8830-500
3. TRIM LEADS OF CONNECTORS, J1 & J2.

CAUTION:
CONTAINS PARTS AND ASSEMBLIES SUSCEPTIBLE TO DAMAGE BY ELECTROSTATIC DISCHARGE (ESD).

DRAWN / DATE	SIGLER 8-7-90
CHECKED / DATE	R. CRAWFORD 4-30-91
APPROVED / DATE	RENA HIXON 4-30-91
*	

IFR SYSTEMS INC
Wichita, Kansas 67209

TITLE: PC BD ASS'Y, VIDEO DETECTOR, S-1403C, W/MLD

SIZE	DWG. NO.	REV
D	7010-8830-500	C1

SCALE 4:1 | DO NOT SCALE | FSCM 51190 | SHEET 1 of 1

ASSY NO.	REVISION	DESCRIPTION	LAST ECN	DATE INC
7010-8830-500	C	PCB ASSY,VIDEO DETECTOR		10/30/71

STAT	REF.DES.	QTY	COMP PART NO.	DESCRIPTION	EFFECTIVE
ACT	*01	1.00	1700-8121-700	PC BD, VIDEO DETECTOR ATC-601	00/00/00
ACT	*02	1.00	2400-7856-800	LABEL,ESD	00/00/00
ACT	C13001	1.00	1622-0030-001	CAP, PF 3.0, 50V CHIP *	00/00/00
ACT	C13002	1.00	0002-0000-000	*** REF DESIG NOT USED ***	00/00/00
ACT	C13003	1.00	0004-0000-000	*** PRINTED ELEMENT ***	00/00/00
ACT	CR13001	1.00	4816-0000-005	DIODE, HSMS-2800, SOT-23	00/00/00
ACT	J13001	1.00	2123-0000-054	CONN,RF SUB,SMA,PCB RTANG JACK	00/00/00
ACT	J13002	1.00	2200-2094-200	CONN,M SMB,PC MTG,RIGHT ANGLE	00/00/00
ACT	R13001	1.00	4722-1509-001	RES, 1% 1/8W 15.0 OHM *	00/00/00
ACT	R13002	2.00	4722-1829-001	RES, 1% 1/8W 18.2 OHM *	00/00/00
ACT	R13003	-.--	4722-1829-001	RES, 1% 1/8W 18.2 OHM *	00/00/00
ACT	R13004	1.00	4722-4759-001	RES, 1% 1/8W 47.5 OHM *	00/00/00
ACT	R13005	1.00	4722-3929-001	RES, 1% 1/8W 39.2 OHM *	00/00/00
ACT	R13006	1.00	4722-5119-001	RES, 1% 1/8W 51.1 OHM *	00/00/00
ACT	R13007	1.00	4722-5629-001	RES, 1% 1/8W 56.2 OHM *	00/00/00
ACT	R13008	1.00	4722-3320-001	RES, 1% 1/8W 332 OHM *	00/00/00
ACT	R13009	1.00	4722-1820-001	RES, 1% 1/8W 182 OHM *	00/00/00

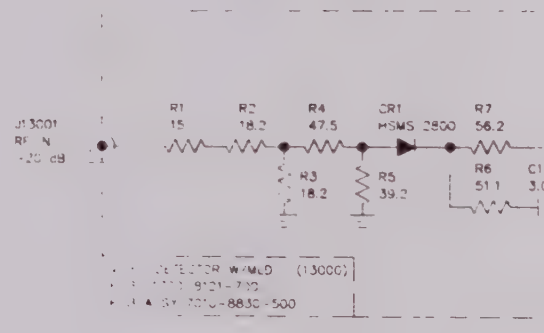
R1
15
R2
18.2
R4
47.5
CR1
MSMS 2800
R7
56.2
R3
18.2
R5
39.2
R6
51.1

G H J K L

DATE	REV	CHANGE	APVD
5-13-91	C	DESIGN RELEASE RGC	SL

DESIGN RELEASE

ANY CHANGES TO THIS
DOCUMENTATION MUST BE COORDINATED
THROUGH ENGINEERING

MAY 14 1991

NOTES.
(UNLESS OTHERWISE SPECIFIED)

1. ALL REFERENCE NUMBERS CARRY AN ASSIGNED DESIGNATOR SERIES.
   THIS SCHEMATIC CARRIES SERIES: 13000
2. ALL RESISTORS ARE 1%, 1/8W
3. ALL RESISTANCE IS EXPRESSED IN OHMS.
   ALL CAPACITANCE IS EXPRESSED IN PICO FARADS.
   ALL INDUCTANCE IS EXPRESSED IN MICROHENRIES.
4. HIGHEST REFERENCE DESIGNATIONS.
   CJ, CR1, J13002, R9
5. REFERENCE DESIGNATIONS NOT USED
   C2.

* - INDICATES PRINTED TRANSMISSION LINES OF OTHER THAN 50 OHMS IMPEDANCE WHICH CONSTITUTE CIRCUIT ELEMENTS. 50 OHM TRANSMISSION LINES ARE NOT SHOWN.

CONTAINS PARTS AND ASSEMBLIES SUSCEPTIBLE TO DAMAGE BY ELECTROSTATIC DISCHARGE (ESD)

J13002
REPLY VIDEO

IFR SYSTEMS INC
10200 West York St, Wichita, Kansas 67215

DRAWN D. HAYNES	DATE 8-13-90	TITLE: CIRCUIT SCHEMATIC VIDEO DETECTOR W/MLD
CHECKED R. CRAWFORD	DATE 4-30-91	
APPROVED E.R HIXON	DATE 4-30-91	SIZE C; DWG. NO. 0000-8830-500; REV C
		SCALE; DO NOT SCALE; FSCM 51130; SHEET 1 OF 1

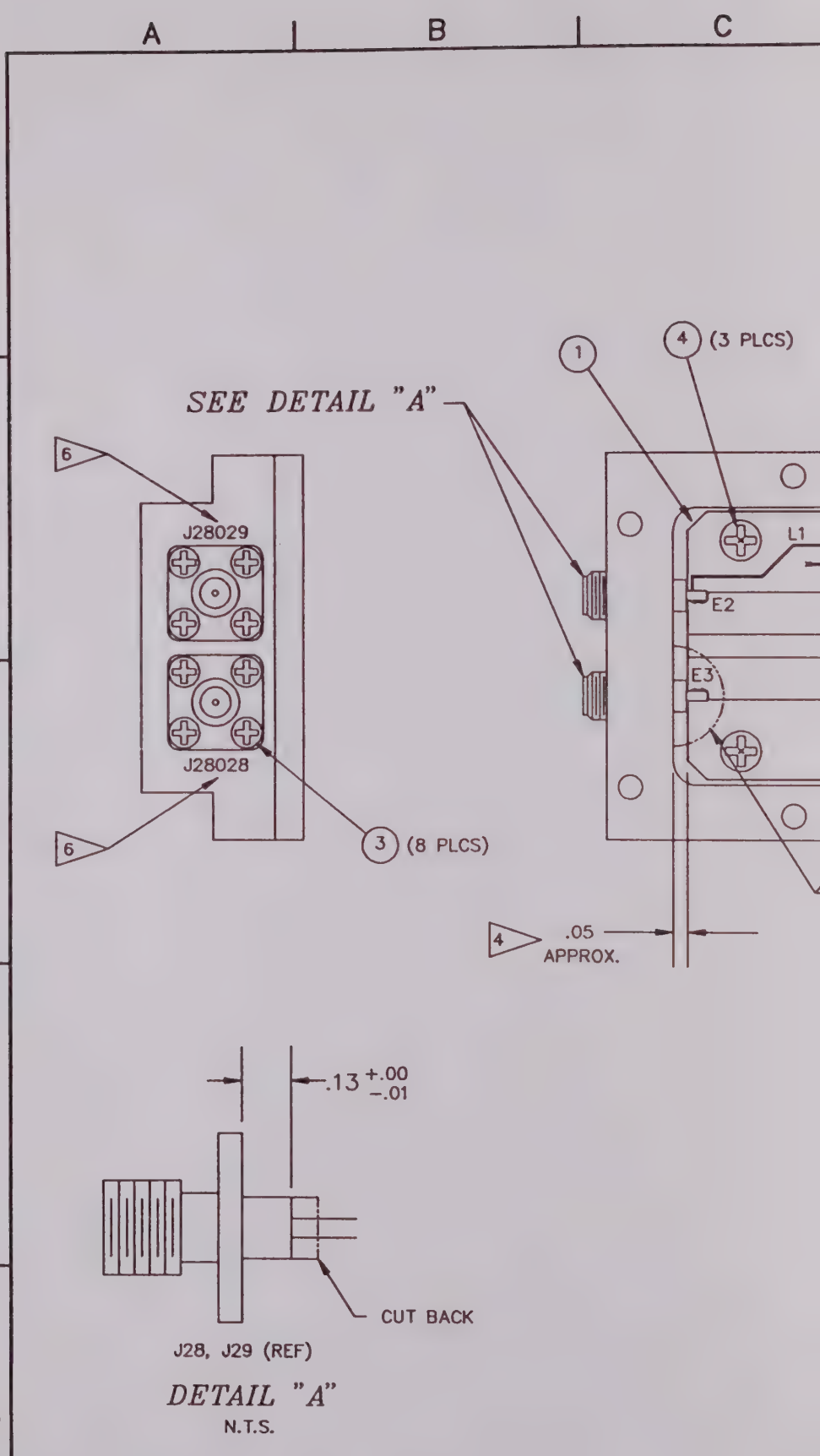
A
B
C
1
2
3
4
5
SEE DETAIL "A"
6
J28029
J28028
6
3 (8 PLCS)
1
4 (3 PLCS)
L1
E2
E3
4
.05
APPROX.
.13 +.00 −.01
CUT BACK
J28, J29 (REF)
DETAIL "A"
N.T.S.

D | E | F | G

DATE	REV	CHANGE	APVD
2-22-90	A	DESIGN RELEASE	CJKM
3-26-90	B	INC. REF. #M127 JS	CJKM
6-28-90	B-1	INC REF #M197 JS	SL
12-4-90	B-1	PROD REL PER ECN 13846	CJKM
7-12-91	B-2	INC ECN 14221 AO	BP

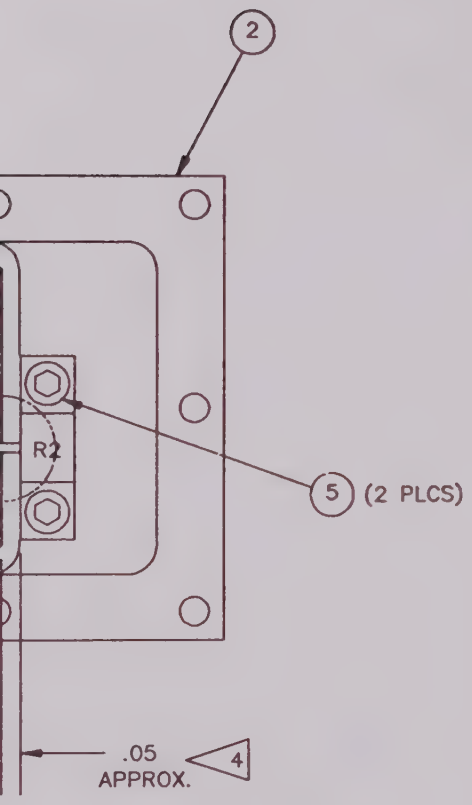

NOTE:

1. ALL REFERENCE DESIGNATORS CARRY AN ASSIGNED DESIGNATOR SERIES, THIS DWG. CARRIES SERIES 28000 (i.e., R1 IS R28001).

2. REF. CIRCUIT SCHEMATIC: 0000-8140-300 FOR ATC-601
   REF. CIRCUIT SCHEMATIC: 0000-8540-300 FOR TCAS-201
   REF. CIRCUIT SCHEMATIC: 0000-8142-100 FOR S-1403

3 TRIM TERMINATION RESISTOR LEAD TO .17 ±.01 BEFORE INSTALLING.

4 POSITION PC BD AND TERMINATION RESISTOR TO MAINTAIN EQUAL GAP AT BOTH ENDS (APPROX. .05).

5 SPOT COAT AREAS INDICATED WITH CONFORMAL COAT AS PER IFR-STD-0105 AFTER FINAL TEST RUN-UP (AVOID OVERSPRAY ON BLOCK FLANGE).

6 FOR S-1403, J28028 IS J23014.

DRAWN / DATE	SIGLER 2-9-90
CHECKED / DATE	T. DeSMIT 2-22-90
APPROVED / DATE	L. ZIELKE 2-22-90

IFR SYSTEMS INC
10200 West York St., Wichita, Kansas 67215

TITLE: MECHANICAL ASSEMBLY, PWR TERMINATION, ATC-601

SIZE: C | DWG. NO. 7005-8142-100 | REV B2

SCALE: 2:1 | DO NOT SCALE | FSCM 51190 | SHEET 1 OF 1

ASSY NO.	REVISION	DESCRIPTION	LAST ECN	DATE INC
7005-8142-100	B2	MECH ASSY, PWR TERMINATION	14221	06/25/91

STAT	REF.DES.	QTY	COMP. PART NO.	DESCRIPTION	EFFECTIVE
ACT		.00	DWG-0000-8142-100	SCHEM, PWR TERMINATION	00/00/00
ACT	*01	1.00	1700-8122-100	PC BD, PWR TERMINATION	00/00/00
ACT	*02	1.00	1415-8151-300	ENCL,BLK,POWER TERMINATION	00/00/00
ACT	*03	8.00	2801-0156-006	SCREW,2-56 X 5/32 PPHM	00/00/00
ACT	*04	3.00	2803-0250-006	SCREW,4-40 X 1/4 PPHM	00/00/00
ACT	*05	2.00	2803-0250-002	SCREW,4-40 X 1/4 SHC	00/00/00
ACT	C28001	3.00	0004-0000-000	*** PRINTED ELEMENT ***	00/00/00
ACT	HY28001	-.--	0004-0000-000	*** PRINTED ELEMENT ***	00/00/00
ACT	J28028	2.00	2105-7610-100	CONN 2502-1201 AMERICON MOD 1	00/00/00
ACT	J28029	-.--	2105-7610-100	CONN 2502-1201 AMERICON MOD 1	00/00/00
ACT	L28001	-.--	0004-0000-000	*** PRINTED ELEMENT ***	00/00/00
ACT	R28001	1.00	4721-0510-003	RES, 5, 1/4W, 51 OHM CHIP	00/00/00
ACT	R28002	1.00	5650-8100-100	TERMINATION, FLG MNT	00/00/00

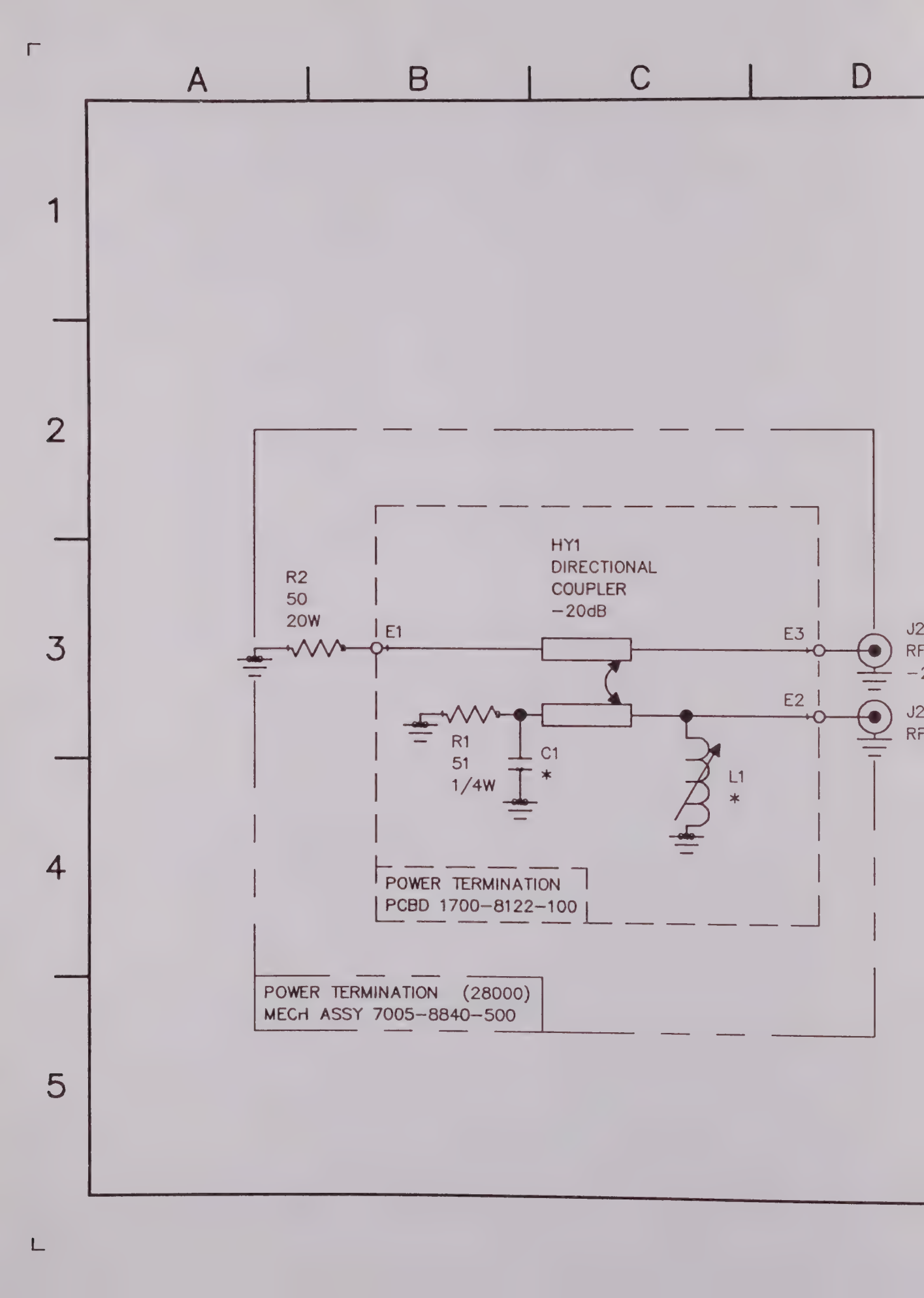
A
B
C
D
1
2
3
4
5
R2
50
20W
E1
HY1
DIRECTIONAL
COUPLER
−20dB
E3
E2
J2
RF
R1
51
1/4W
C1
*
L1
*
POWER TERMINATION
PCBD 1700−8122−100
POWER TERMINATION (28000)
MECH ASSY 7005−8840−500

E | F | G | H

DATE	REV	CHANGE		APVD.
5-14-91	A	DESIGN RELEASE	RGC	SL
7-26-91	B	PRODUCTION RELEASED PER ECN 14221	BP	

091

NOTES:
(UNLESS OTHERWISE SPECIFIED)

1. ALL REFERENCE NUMBERS CARRY AN ASSIGNED DESIGNATOR SERIES.
   THIS SCHEMATIC CARRIES SERIES: (28000)
2. HIGHEST REFERENCE DESIGNATIONS.
   C1, E3, HY1, J23014, J28001, L1, R2.

3. REFERENCE DESIGNATIONS NOT USED.
   J23001-J23013.

* - INDICATES PRINTED TRANSMISSION LINES OF OTHER THAN 50 OHMS IMPEDANCE WHICH CONSTITUTE CIRCUIT ELEMENTS. 50 OHM TRANSMISSION LINES ARE NOT SHOWN.

CAUTION:
CONTAINS PARTS AND ASSEMBLIES SUSCEPTIBLE TO DAMAGE BY ELECTROSTATIC DISCHARGE (ESD).

IFR SYSTEMS INC
10200 West York St., Wichita, Kansas 67215

DRAWN D. HAYNES DATE 8-10-90	TITLE: CIRCUIT SCHEMATIC POWER TERMINATION
CHECKED R.CRAWFORD DATE 4-10-91	
APPROVED E.R.HIXON DATE 5-2-91	SIZE B; DWG. NO. 0000-8142-100; REV B
	SCALE: ; DO NOT SCALE; FSCM 51190; SHEET 1 OF 1

WIRE RUNNING LIST

FROM	TO	COLOR	LENGTH	AWG	NOTES
FL30002	FL30013	YEL	4.75	26	-12
FL30006	FL30012	RED	4.50	26	+12
FL30012	FL30001	RED	2.00	26	+12
FL30005	FL30003	BRN	11.20	26	11
FL30001	GL30001		47uf35v TANT		
E24008	E27002		BUSS WIRE	22	
FL30001	P31006-5	RED	6.00	26	
FL30011	-1	WHT/YEL	6.50	26	
FL30013	-2	YEL	6.75	26	
GL1	-3	BLK	5.75	26	
FL30003	-6	BRN	10.25	26	
	KEY -4				

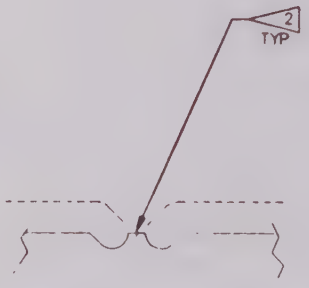

DETAIL - A
SCALE: 4 1

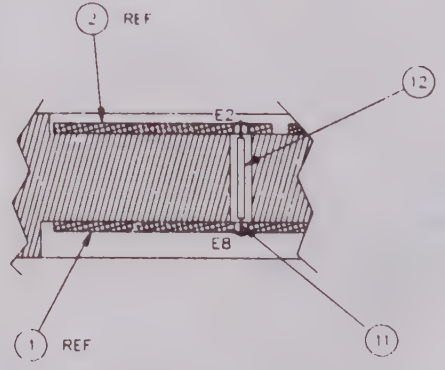

DETAIL B

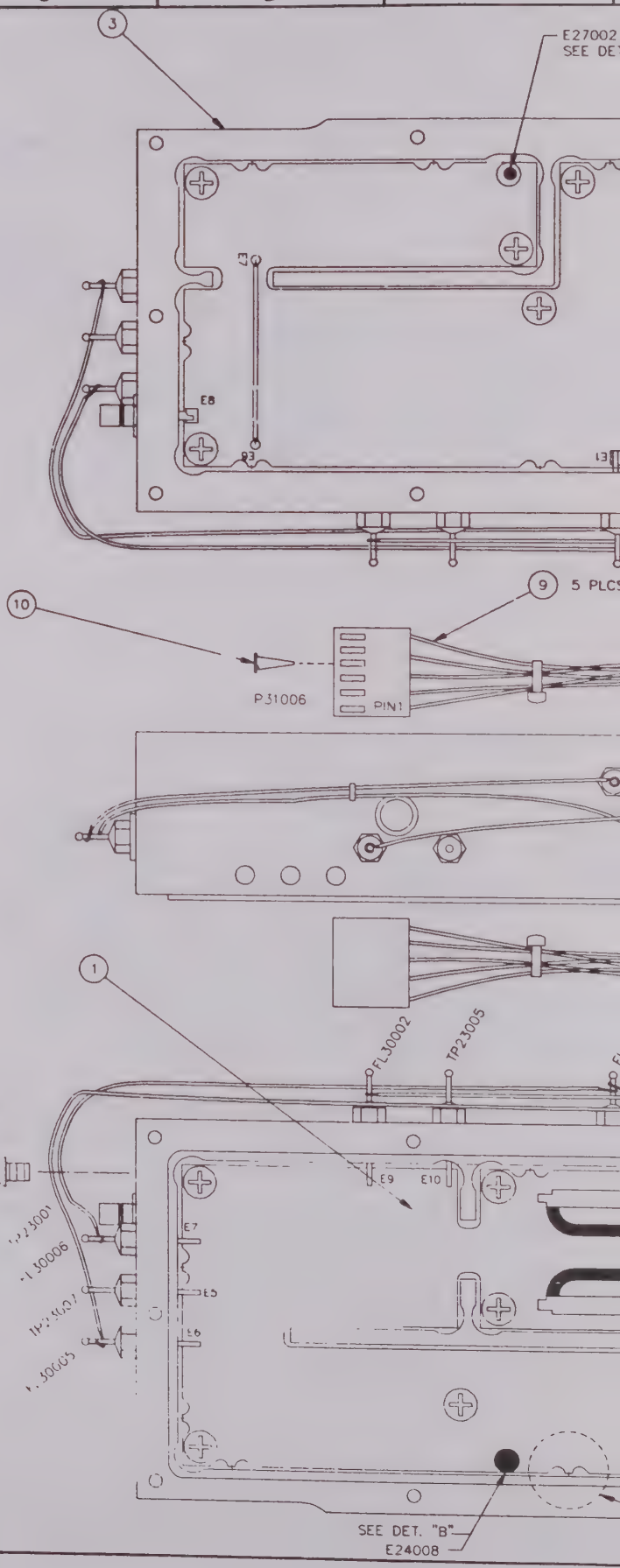

13

DATE	REV	CHANGE	PMD
5/29/91	E	DESIGN RELEASE	SL

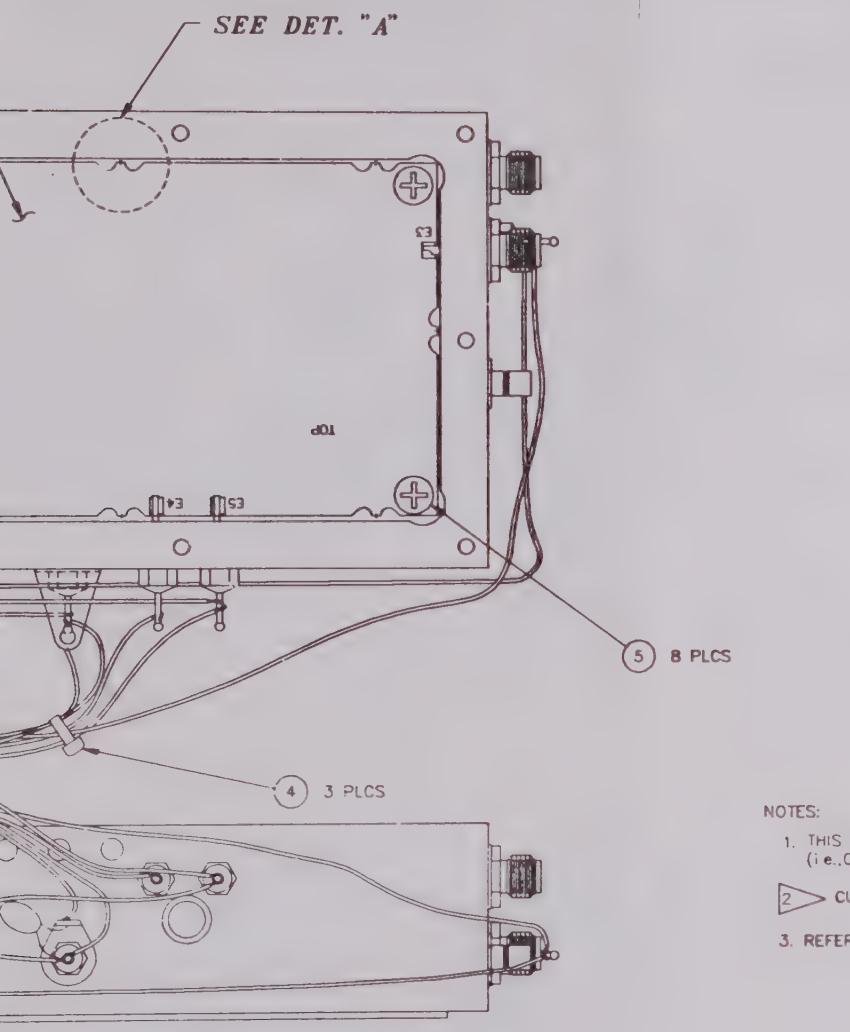

NOTES:

1. THIS MECH ASSY CARRIES A REF DES SERIES OF 30000 (i.e.,C1 IS C30001).
2. CUT BORDER AWAY FROM PC BOARD AT LOCATIONS SHOWN.
3. REFERENCE SCHEMATIC: 0000-8840-700

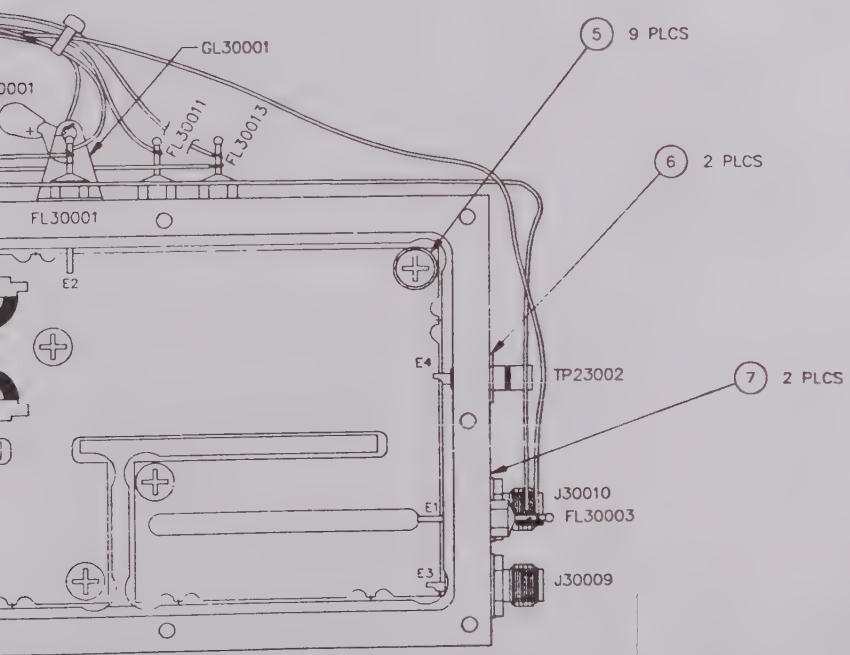

SEE DET "A"

DRAWN SIGLER 1-26-91		IFR SYSTEMS INC. 10200 West York St., Wichita, Kansas 67215
CHECKED		TITLE: MECH ASS'Y SOURCE/PWR AMP
APPROVED		SIZE D; DWG NO. 7005-8840-700; REV E
		SCALE 2:1; DO NOT SCALE; FSCM 51190; SHEET 1 OF 1

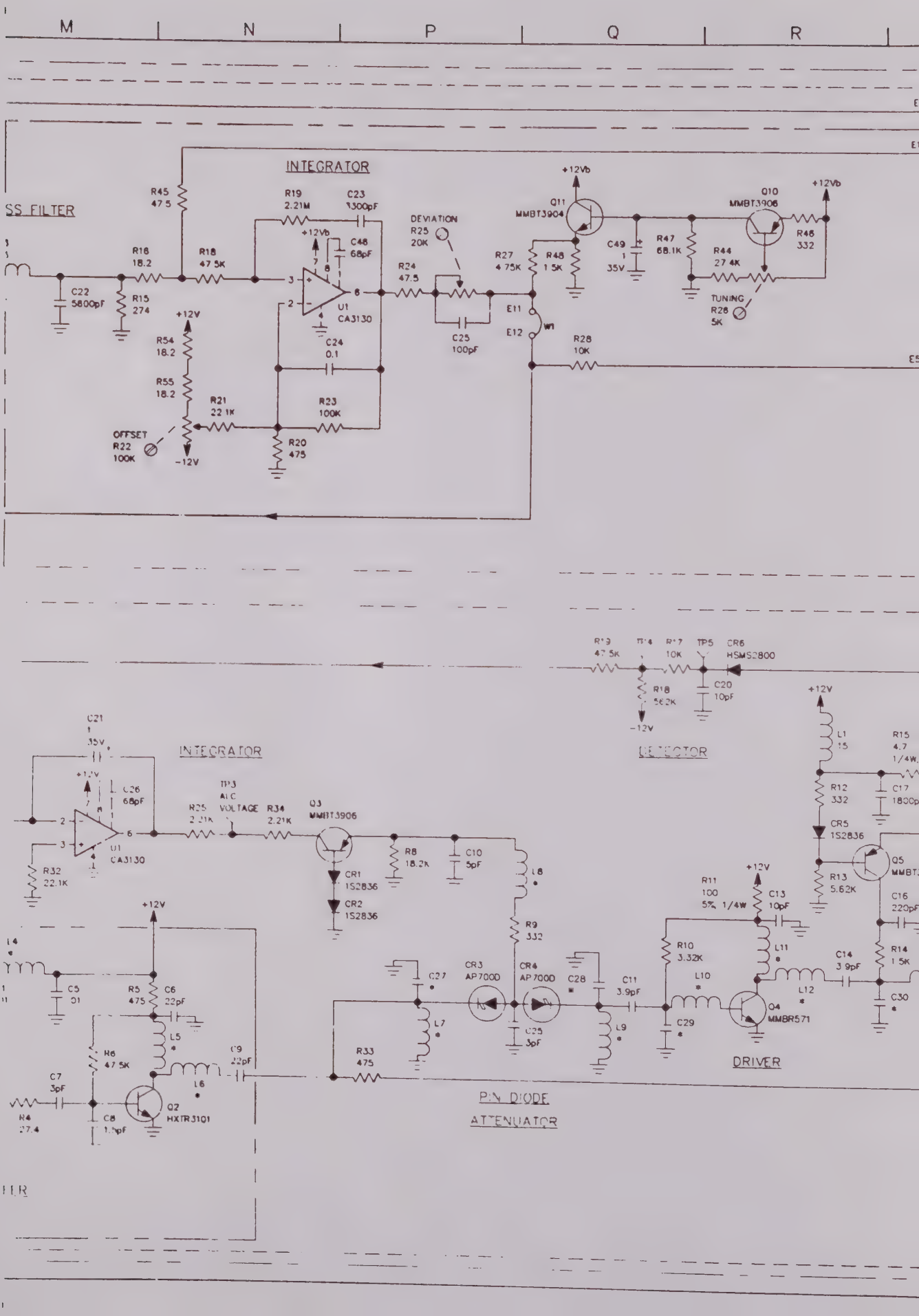
M
N
P
Q
R
INTEGRATOR
SS FILTER
R45
47.5
R19
2.21M
C23
1300pF
+12Vb
C48
68pF
R18
18.2
R18
47.5K
C22
5800pF
R15
274
U1
CA3130
DEVIATION
R25
20K
R24
47.5
C25
100pF
Q11
MMBT3904
+12Vb
R27
4.75K
R48
1.5K
C49
1
35V
R47
68.1K
Q10
MMBT3906
+12Vb
R46
332
R44
27.4K
TUNING
R26
5K
E11
E12
W1
R28
10K
+12V
R54
18.2
R55
18.2
R21
22.1K
R23
100K
C24
0.1
OFFSET
R22
100K
-12V
R20
475
R13
47.5K
TP4
R17
10K
TP5
CR6
HSMS2800
R18
562K
C20
10pF
-12V
DETECTOR
+12V
C21
35V
INTEGRATOR
C26
68pF
TP3
AGC
VOLTAGE
R25
2.21K
R34
2.21K
Q3
MMBT3906
U1
CA3130
R32
22.1K
R8
18.2K
C10
5pF
CR1
1S2836
CR2
1S2836
L8
R9
332
L1
15
R15
4.7
1/4W
R12
332
C17
1800p
CR5
1S2836
Q5
MMBT
R13
5.62K
C16
220pF
+12V
R11
100
5% 1/4W
C13
10pF
L11
R10
3.32K
L10
L12
C14
3.9pF
R14
1.5K
C30
Q4
MMBR571
DRIVER
C27
CR3
AP7000
CR4
AP7000
C28
C11
3.9pF
C25
3pF
L7
L9
C29
L4
C5
01
+12V
R5
475
C6
22pF
L5
R6
47.5K
C9
22pF
C7
3pF
L6
R4
27.4
C8
1.5pF
Q2
HXTR3101
R33
475
PIN DIODE
ATTENUATOR

T U V W X

DATE	REV	CHANGE	APPR.
6-10-91	E	DESIGN RELEASE RGC	SL

TP23002
MULTIPLIER
1030 MHZ
-47 dBm

TP23005
PHASE DETECTOR
OFFSET VOLTAGE

TP23007
VCO TUNE
VOLTAGE
NOM 4VDC

STANDARDS:
(UNLESS OTHERWISE NOTED)
1. ALL REFERENCE NUMBERS CARRY AN ASSIGNED DESIGNATOR SERIES.
THIS SCHEMATIC CARRIES SERIES:
7005-8840-700 SERIES 30000 REV E
7010-6830-400 SERIES 24000 REV E1
7010-8830-700 SERIES 27000 REV E
2. ALL RESISTORS ARE 1/8 W, 1 % TOLERANCE.
3. ALL RESISTANCE IS EXPRESSED IN OHMS.
4. ALL CAPACITANCE IS EXPRESSED IN MICROFARADS.

NOTES:
(UNLESS OTHERWISE NOTED)
1. LAST REFERENCE NUMBERS USED.
7005-8840-700 (SERIES 30000)
C1, FL13, J10, P31006, TP23007.
7010-6830-400 (SERIES 24000)
C51, CR4, L7, Q11, R55 U1, HY1, Z30.
7010-8830-700 (SERIES 27000)
C34, CR7, HY1, L18, Q6, R35, TP5, U1,

2. REFERENCE NUMBERS NOT USED.
7005-8840-700 (SERIES 30000)
7010-6830-400 (SERIES 24000)
C7, C8, C12, C16, C17, C48, L3-L3, L8-L10, R17, R29, Z4, Z7, Z11.
7010-8830-700 (SERIES 27000)
C12, C15, C22, R7, R23, R24, R26-R31.

3 C24047 IS SELECT AT TEST.
NOMINAL VALUE IS 1.0pF
RANGE IS .4 TO 1.5 pF.

COUPLER

R16
51.1

HY1
DIRECTIONAL
COUPLER
-20dB

L18
*

C19
3.9pF

L16
*

L17
*

E3

J30010
1030MHz
+15dBM NOM.

C31
*

C32
*

C38
*

C34
*

E8

TP23001
VCO RF
1030 MHZ
-20 dBm

POWER AMP (27000)
PCBD 1700-6820-700
PCBD ASSY 7010-8830-700

DRAWN D HAYNES	DATE 4-5-88	IFR SYSTEMS INC
CHECKED R CRAWFORD	DATE 6-8-91	TITLE CIRCUIT SCHEMATIC SOURCE/PWR AMP MECH
APPROVED P R HARRIS	DATE 6-10-91	SIZE EX DWG NO 0000-8840-700 REV E
SCALE	DO NOT SCALE	FSCM 51190 SHEET 1 OF 3

1 2 3 4 5 6 7

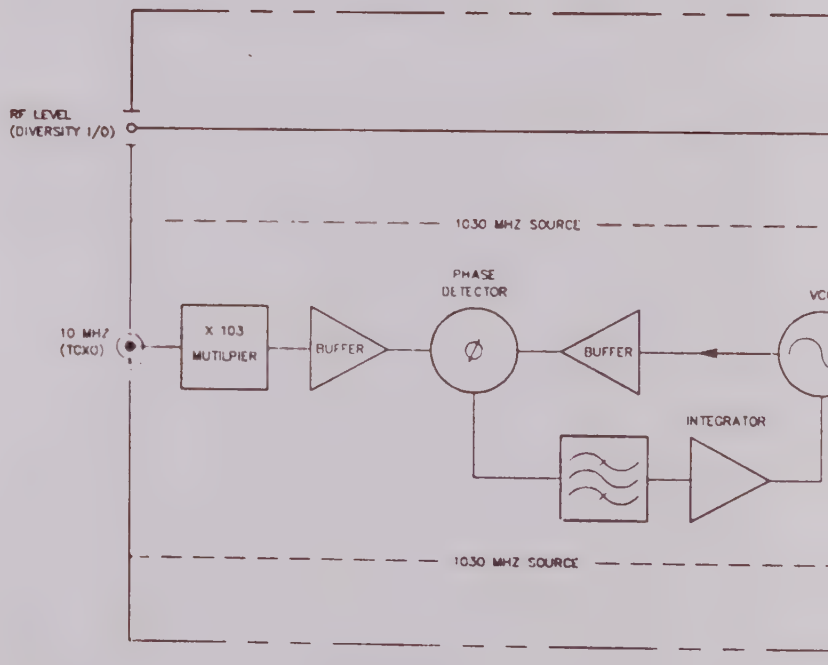
RF LEVEL
(DIVERSITY I/O)
1030 MHZ SOURCE
PHASE
DETECTOR
10 MHZ
(TCXO)
X 103
MUTILPIER
BUFFER
BUFFER
INTEGRATOR
1030 MHZ SOURCE

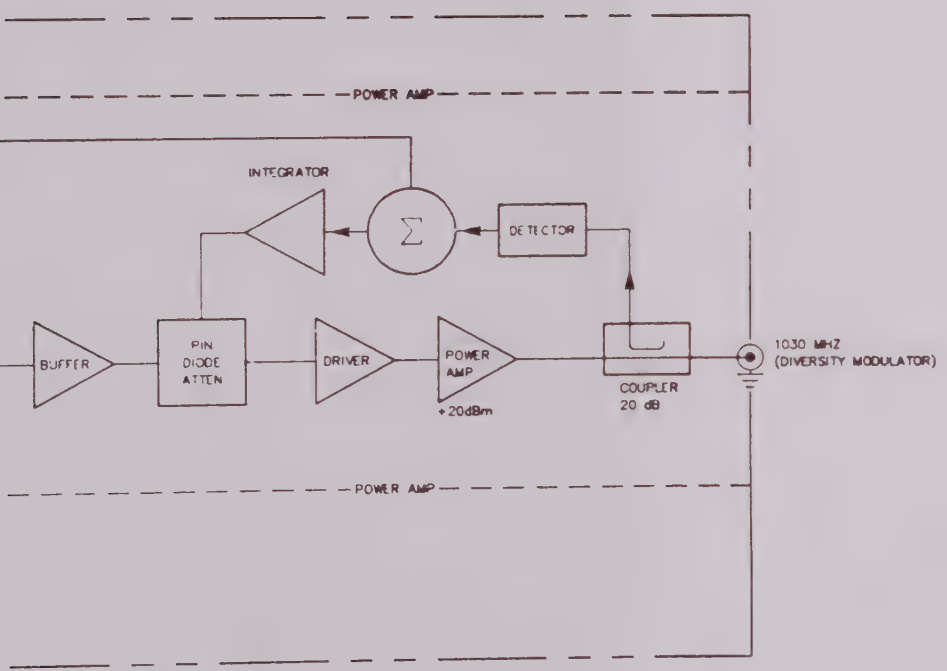
POWER AMP
INTEGRATOR
Σ
DETECTOR
BUFFER
PIN DIODE ATTEN
DRIVER
POWER AMP
+20dBm
COUPLER 20 dB
1030 MHZ (DIVERSITY MODULATOR)
POWER AMP

ASSY NO.	REVISION	DESCRIPTION	LAST ECN	DATE INC
7005-8840-700	E	MECH ASSY,SOURCE/PWR AMP		10/30/71

STAT	REF.DES.	QTY	COMP. PART NO.	DESCRIPTION	EFFECTIVE
ACT		.80	6003-0000-001	WIRE,HOOK,TFE,26GA, 7S,BLACK	00/00/00
ACT		1.80	6003-0000-002	WIRE,HOOK,TFE,26GA, 7S,BROWN	00/00/00
ACT		1.20	6003-0000-003	WIRE,HOOK,TFE,26GA, 7S,RED	00/00/00
ACT		.80	6003-0000-005	WIRE,HOOK,TFE,26GA, 7S,YELLOW	00/00/00
ACT		.80	6003-0000-015	WIRE,HOOK,TFE,26GA, 7S,WHT/YEL	00/00/00
ACT	*01	1.00	7010-6830-400	PCB ASSY, 1030MHZ SOURCE	00/00/00
ACT	*02	1.00	7010-8830-700	PCB ASSY, PWR AMP	00/00/00
ACT	*03	1.00	1415-6850-600	ENCL.BLK,SOURCE/PWR AMP DIVERS	00/00/00
ACT	*04	3.00	6004-6005-400	TY-RAP,4.0 LG	00/00/00
ACT	*05	18.00	2803-0188-006	SCREW,4-40 X 3/16 PPHM	00/00/00
ACT	*06	2.00	2840-7600-229	WASHER,ALUM,.310D,.188ID,.038T	00/00/00
ACT	*07	2.00	2840-7600-208	WASHER,ALUM,.380D,.250ID,.020T	00/00/00
ACT	*09	5.00	2114-0000-038	CONTACT,D-CANT,22-30AWG,CRIMP	00/00/
ACT	*10	1.00	2127-9900-100	KEY,POLARIZIN,MOLEX 15-04-9209	00/0
ACT	*11	.00	1050-0000-073	WIRE,BUS,TINNED COPPER,22GA	00/00/
ACT	*12	.10	6011-0027-001	TUBING,TF,22 AWG,NATURAL,TW	00/0
ACT	*13	2.00	2805-0250-006	SCREW 8-32X1/4 PBHMS	00/
ACT	C30001	1.00	1508-0476-018	CAP,uF 47, 35V,TANT,RDL *	00/
ACT	FL30001	10.00	5801-0000-006	FILTER,EMI/RFI 1500pF 8-32DIA*	00/0
ACT	FL30002	-.--	5801-0000-006	FILTER,EMI/RFI 1500pF 8-32DIA*	00/00
ACT	FL30003	-.--	5801-0000-006	FILTER,EMI/RFI 1500pF 8-32DIA*	00/00/0
ACT	FL30005	-.--	5801-0000-006	FILTER,EMI/RFI 1500pF 8-32DIA*	00/00/00
ACT	FL30006	-.--	5801-0000-006	FILTER,EMI/RFI 1500pF 8-32DIA*	00/00/00
ACT	FL30011	-.--	5801-0000-006	FILTER,EMI/RFI 1500pF 8-32DIA*	00/00/00
ACT	FL30012	-.--	5801-0000-006	FILTER,EMI/RFI 1500pF 8-32DIA*	00/00/0
ACT	FL30013	-.--	5801-0000-006	FILTER,EMI/RFI 1500pF 8-32DIA*	00/00/00

ASSY NO.	REVISION	DESCRIPTION	LAST ECN	DATE INC
7005-8840-700	E	MECH ASSY,SOURCE/PWR AMP		10/30/71

STAT	REF.DES.	QTY	COMP. PART NO.	DESCRIPTION	EFFECTIVE
ACT	GL30001	1.00	2850-0000-100	LUG,GND,#8 RT.ANG NON-LOCKING*	00/00/00
ACT	J30009	2.00	2123-0000-030	CONN,FSMA,W/TERM,STR BULKHEAD*	00/00/00
ACT	J30010	-.--	2123-0000-030	CONN,FSMA,W/TERM,STR BULKHEAD*	00/00/00
ACT	P31006	1.00	2115-0001-006	CONN,MOLEX 22-01-2061	00/00/00
ACT	TP23001	2.00	2123-0000-038	CONN,M SMB,W/TERM,STR BULKHD *	00/00/00
ACT	TP23002	-.--	2123-0000-038	CONN,M SMB,W/TERM,STR BULKHD *	00/00/00
ACT	TP23005	-.--	5801-0000-006	FILTER,EMI/RFI 1500pF 8-32DIA*	00/00/00
ACT	TP23007	-.--	5801-0000-006	FILTER,EMI/RFI 1500pF 8-32DIA*	00/00/00

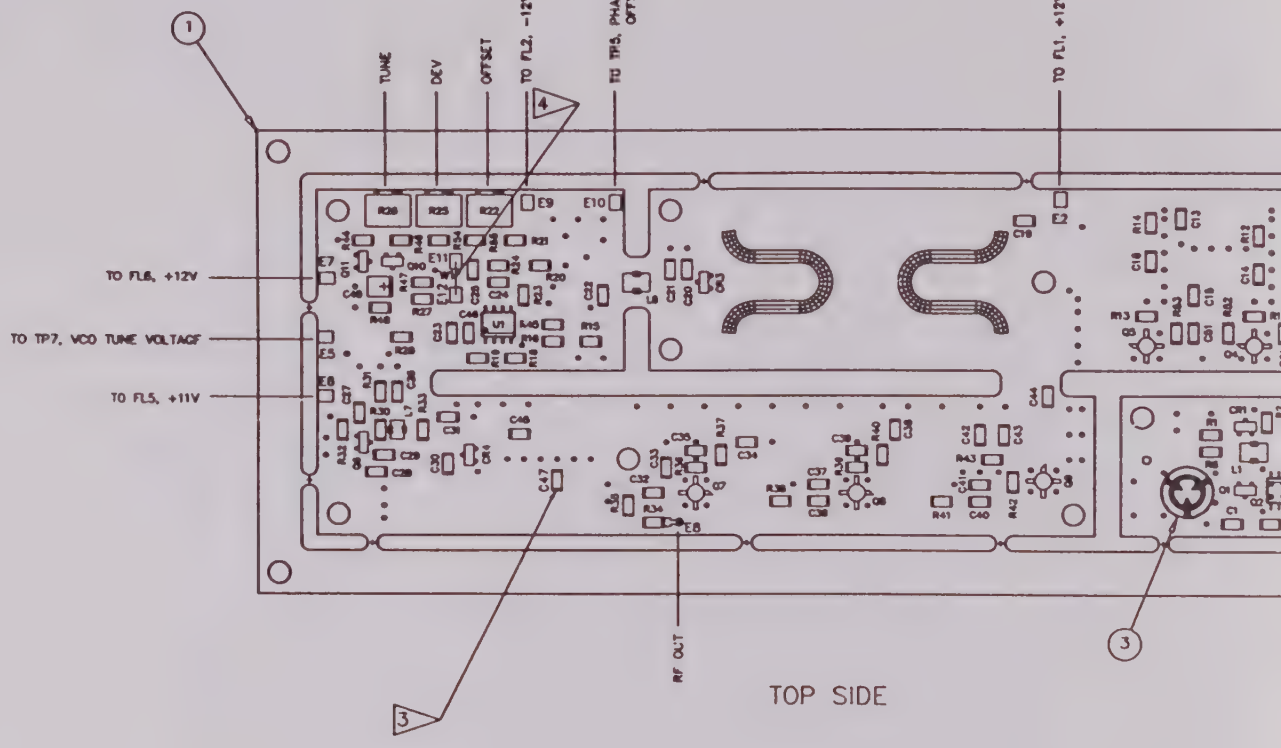

TOP SIDE

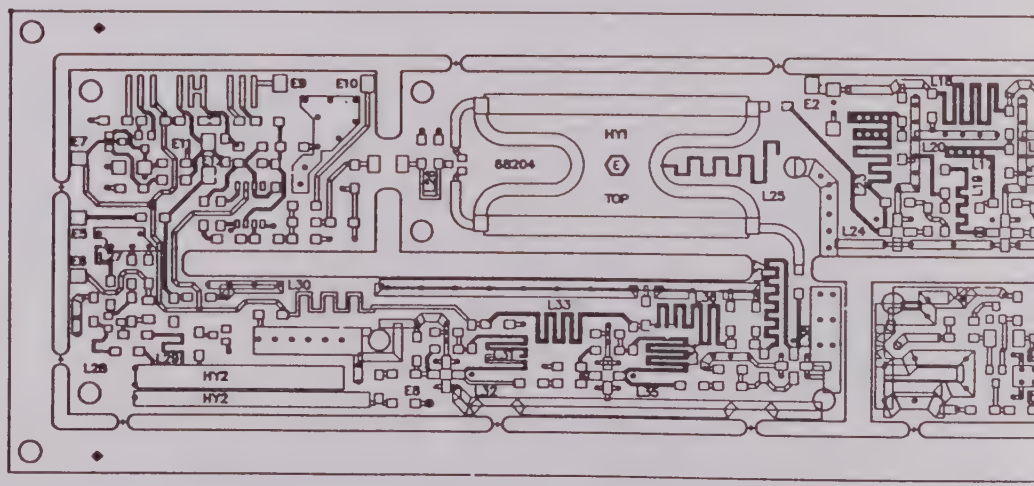

TOP SIDE

G H J K L

DATE	REV	CHANGE	APVD
1/10/89	C	REDRAWN W/CHANGES PER ECN 11857 JR	SLR
3/9/89	C-1	INC RC 12164 JS	BP
6/23/89	D	INC ECN 12308 SCP	BP
7/25/89	D-1	INC ECN 12547 JR	BP
8/4/89	D-2	INC ECN 12610 SCP	BP
9/6/89	D-3	INC ECN 12712 MB	BP
2/16/90	D-4	INC ECN 13158 AQ	BP
10-8-90	E / E-1	INC ECN 13424 & 13684 JS	BP
7/15/91	E-2	INC ECN 14227 BP	BP
7/18/91	E-3	INC ECN 14008 AQ	BP
9/6/91	E-4	INC RC 14316	BP

TO TP2

TO FL3, +11V

TO J9, TCXO IN

L11

NOTE:

1. ALL REFERENCE DESIGNATORS CARRY AN ASSIGNED DESIGNATOR SERIES. THIS DWG CARRIES SERIES 24000 (i.e. R1 IS R24001).
2. REF SCHEMATIC P/O 0000-6840-400 S-1402
   0000-8840-700 S-1403C
3. C7 IS S.A.T. – NOMINAL VALUE: 1.0pf
   RANGE VALUE: 0.4 TO 1.5pf
4. TO BE INSTALLED IN FINAL TEST.

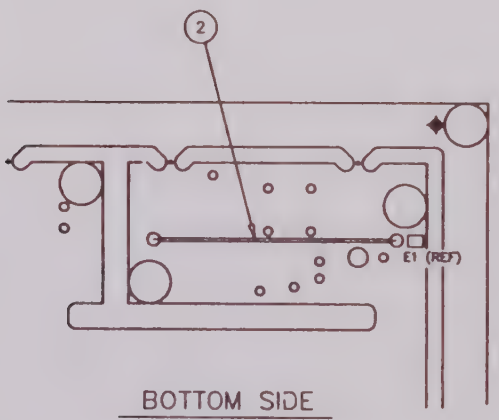

BOTTOM SIDE

(SHOWING PLACEMENT OF JUMPER WIRE)

CAUTION:
CONTAINS PARTS AND ASSEMBLIES SUSCEPTIBLE TO DAMAGE BY ELECTROSTATIC DISCHARGE (ESD).

	IFR SYSTEMS INC
DRAWN RIDDLE 1/10/89	TITLE PCB ASSY 1030 MHz SOURCE
CHECKED R. CRAWFORD 1/16/89	
APPROVED P. R. HARRIS 1/16/89	SIZE D · DWG NO. 7010-6830-400 · REV E4
	SCALE 2:1 · DO NOT SCALE · FSCM 51190 · SHEET 1 OF 1

ASSY NO.	REVISION	DESCRIPTION	LAST ECN	DATE INC
7010-6830-400	E1	PCB ASSY, 1030MHZ SOURCE	13684	08/24/90

STAT	REF.DES.	QTY	COMP. PART NO.	DESCRIPTION	EFFECTIVE
ACT	*01	1.00	1700-6820-400	PC BD, 1006.2MHZ SOURCE	00/00/00
ACT	*02	.08	6003-0000-002	WIRE,HOOK,TFE,26GA, 7S,BROWN	00/00/00
ACT	*03	1.00	2400-7856-800	LABEL,ESD	00/00/00
ACT	*C24047SAT	.00	1622-0010-001	CAP,PF 1.0 50V CHIP	00/00/00
ACT	*W24001	.00	1050-0000-075	WIRE,BUS,TINNED COPPER,26GA	00/00/00
ACT	C24001	10.00	1622-0103-001	CAP, UF .01, 50V, CHIP X7R *	00/00/00
ACT	C24002	-.--	1622-0103-001	CAP, UF .01, 50V, CHIP X7R *	00/00/00
ACT	C24003	-.--	1622-0103-001	CAP, UF .01, 50V, CHIP X7R *	00/00/00
ACT	C24004	10.00	1622-0220-001	CAP, PF 22, 100V, CHIP NPO *	00/00/00
ACT	C24005	1.00	1550-0101-510	CAP,VAR .5-2.5 PF, 9402-0	00/00/00
ACT	C24006	4.00	1622-0159-001	CAP, PF 1.5, 50V, CHIP NPO *	00/00/00
ACT	C24007	14.00	0002-0000-000	*** REF DESIG NOT USED ***	00/00/00
ACT	C24008	-.--	0002-0000-000	*** REF DESIG NOT USED ***	00/00/00
ACT	C24009	-.--	1622-0103-001	CAP, UF .01, 50V, CHIP X7R *	00/00/00
ACT	C24010	-.--	1622-0220-001	CAP, PF 22, 100V, CHIP NPO *	00/00/00
ACT	C24011	2.00	1622-0050-001	CAP, pF 5.0 50V CHIP *	00/00/00
ACT	C24012	-.--	0002-0000-000	*** REF DESIG NOT USED ***	00/00/00
ACT	C24013	-.--	1622-0103-001	CAP, UF .01, 50V, CHIP X7R *	00/00/00
ACT	C24014	-.--	1622-0220-001	CAP, PF 22, 100V, CHIP NPO *	00/00/00
ACT	C24015	-.--	1622-0050-001	CAP, pF 5.0 50V CHIP *	00/00/00
ACT	C24016	-.--	0002-0000-000	*** REF DESIG NOT USED ***	00/00/00
ACT	C24017	-.--	0002-0000-000	*** REF DESIG NOT USED ***	00/00/00
ACT	C24018	-.--	1622-0220-001	CAP, PF 22, 100V, CHIP NPO *	00/00/00
ACT	C24019	-.--	1622-0220-001	CAP, PF 22, 100V, CHIP NPO *	00/00/00
ACT	C24020	-.--	1622-0220-001	CAP, PF 22, 100V, CHIP NPO *	00/00/00
ACT	C24021	2.00	1622-0562-001	CAP,PF 5600 50V CHIP	00/00/00

NO.	REVISION	DESCRIPTION	LAST ECN	DATE INC
7010-6830-400	E1	PCB ASSY, 1030MHZ SOURCE	13684	08/24/90

STAT	REF.DES.	QTY	COMP. PART NO.	DESCRIPTION		EFFECTIVE
ACT	C24022	-.--	1622-0562-001	CAP,PF 5600 50V CHIP		00/00/00
ACT	C24023	1.00	1622-0332-001	CAP,pF 3300 50V CHIP	*	00/00/00
ACT	C24024	1.00	1622-0104-001	CAP, UF .1, 50V, CHIP X7R	*	00/00/00
ACT	C24025	2.00	1622-0101-001	CAP,pF 100, 50V CHIP	*	00/00/00
ACT	C24026	-.--	1622-0103-001	CAP, UF .01, 50V, CHIP X7R	*	00/00/00
ACT	C24027	8.00	1622-0030-001	CAP, PF 3.0, 50V CHIP	*	00/00/00
ACT	C24028	-.--	1622-0030-001	CAP, PF 3.0, 50V CHIP	*	00/00/00
ACT	C24029	-.--	1622-0030-001	CAP, PF 3.0, 50V CHIP	*	00/00/00
ACT	C24030	1.00	1622-0020-001	CAP, PF 2.0, 50V CHIP	*	00/00/00
ACT	C24031	-.--	1622-0101-001	CAP,pF 100, 50V CHIP	*	00/00/00
ACT	C24032	-.--	1622-0030-001	CAP, PF 3.0, 50V CHIP	*	00/00/00
ACT	C24033	-.--	1622-0159-001	CAP, PF 1.5, 50V, CHIP NPO	*	00/00/00
ACT	C24034	-.--	1622-0103-001	CAP, UF .01, 50V, CHIP X7R	*	00/00/00
ACT	C24035	-.--	1622-0220-001	CAP, PF 22, 100V, CHIP NPO	*	00/00/00
ACT	C24036	-.--	1622-0030-001	CAP, PF 3.0, 50V CHIP	*	00/00/00
ACT	C24037	-.--	1622-0159-001	CAP, PF 1.5, 50V, CHIP NPO	*	00/00/00
ACT	C24038	-.--	1622-0103-001	CAP, UF .01, 50V, CHIP X7R	*	00/00/00
ACT	C24039	-.--	1622-0220-001	CAP, PF 22, 100V, CHIP NPO	*	00/00/00
ACT	C24040	-.--	1622-0030-001	CAP, PF 3.0, 50V CHIP	*	00/00/00
ACT	C24041	-.--	1622-0159-001	CAP, PF 1.5, 50V, CHIP NPO	*	00/00/00
ACT	C24042	-.--	1622-0103-001	CAP, UF .01, 50V, CHIP X7R	*	00/00/00
ACT	C24043	-.--	1622-0220-001	CAP, PF 22, 100V, CHIP NPO	*	00/00/00
ACT	C24044	-.--	1622-0220-001	CAP, PF 22, 100V, CHIP NPO	*	00/00/00
ACT	C24045	-.--	1622-0103-001	CAP, UF .01, 50V, CHIP X7R	*	00/00/00
ACT	C24046	1.00	1622-0680-001	CAP,PF 68, 100V,CHIP		00/00/00
ACT	C24048	-.--	0002-0000-000	*** REF DESIG NOT USED ***		00/00/00

ASSY NO.	REVISION	DESCRIPTION	LAST ECN	DATE INC
7010-6830-400	E1	PCB ASSY, 1030MHZ SOURCE	13684	08/24/90

STAT	REF.DES.	QTY	COMP. PART NO.	DESCRIPTION	EFFECTIVE
ACT	C24049	1.00	1507-0105-123	CAP, UF 1.0, 35V, TANT CHIP *	00/00/00
ACT	C24050	-.--	1622-0030-001	CAP, PF 3.0, 50V CHIP *	00/00/00
ACT	C24051	-.--	1622-0030-001	CAP, PF 3.0, 50V CHIP *	00/00/00
ACT	CR24001	1.00	4818-0000-025	DIODE,1S2836,H/S SWITCHING	00/00/00
ACT	CR24002	1.00	4935-0101-200	DIODE,STEP RECOVERY,100NS MIN*	00/00/00
ACT	CR24003	1.00	4816-0000-006	DIODE, HSMS 2802, SOT-23 *	00/00/00
ACT	CR24004	1.00	4826-0000-011	DIODE,MMBV105G,VARC,2.3PF/-3V	00/00/00
ACT	HY24001	28.00	0004-0000-000	*** PRINTED ELEMENT ***	00/00/00
ACT	L24001	1.00	1811-0223-001	IND., SM 22uh, SS-165-16	00/00/00
ACT	L24002	1.00	1811-0221-001	IND., .22uh, 1008CS-221, SM	00/00/00
ACT	L24003	-.--	0002-0000-000	*** REF DESIG NOT USED ***	00/00/00
ACT	L24004	-.--	0002-0000-000	*** REF DESIG NOT USED ***	00/00/00
ACT	L24005	-.--	0002-0000-000	*** REF DESIG NOT USED ***	00/00/00
ACT	L24006	1.00	1811-0153-001	IND.,SM, 15uh, SS-165-14	00/00/00
ACT	L24007	1.00	1811-0102-002	IND,SM 1.0 UH	00/00/00
ACT	L24008	-.--	0004-0000-000	*** PRINTED ELEMENT ***	00/00/00
ACT	L24009	-.--	0004-0000-000	*** PRINTED ELEMENT ***	00/00/00
ACT	L24017	-.--	0002-0000-000	*** REF DESIG NOT USED ***	00/00/00
ACT	L24029	-.--	0002-0000-000	*** REF DESIG NOT USED ***	00/00/00
ACT	Q24001	2.00	4809-0000-020	TRANS, 3906, PNP SMD	00/00/00
ACT	Q24002	1.00	4809-0000-017	TRANS,DRIVER 1GHz FT,NPN,SO-8	00/00/00
ACT	Q24003	6.00	5010-0203-100	TRANS,HXTR NPN HF AMP *	00/00/00
ACT	Q24004	-.--	5010-0203-100	TRANS,HXTR NPN HF AMP *	00/00/00
ACT	Q24005	-.--	5010-0203-100	TRANS,HXTR NPN HF AMP *	00/00/00
ACT	Q24006	1.00	4809-0000-015	TRANS,MMBR911,NPN HI-FREQ,SMD	00/00/00
ACT	Q24007	-.--	5010-0203-100	TRANS,HXTR NPN HF AMP *	00/00/00

ASSY NO.	REVISION	DESCRIPTION	LAST ECN	DATE INC
7010-6830-400	E1	PCB ASSY, 1030MHZ SOURCE	13684	08/24/90

STAT	REF.DES.	QTY	COMP. PART NO.	DESCRIPTION	EFFECTIVE
ACT	Q24008	-.--	5010-0203-100	TRANS,HXTR NPN HF AMP *	00/00/00
ACT	Q24009	-.--	5010-0203-100	TRANS,HXTR NPN HF AMP *	00/00/00
ACT	Q24010	-.--	4809-0000-020	TRANS, 3906, PNP SMD	00/00/00
ACT	Q24011	1.00	4809-0000-021	TRANS, 3904, NPN SMD	00/00/00
ACT	R24001	4.00	4722-1000-001	RES, 1% 1/8W 100 OHM *	00/00/00
ACT	R24002	2.00	4722-1501-001	RES, 1% 1/8W 1.50K OHM *	00/00/00
ACT	R24003	5.00	4722-4759-001	RES, 1% 1/8W 47.5 OHM *	00/00/00
ACT	R24004	2.00	4722-1002-001	RES, 1% 1/8W 10.0K OHM *	00/00/00
ACT	R24005	2.00	4722-1001-001	RES, 1% 1/8W 1.0K OHM *	00/00/00
ACT	R24006	4.00	4722-1509-001	RES, 1% 1/8W 15.0 OHM *	00/00/00
ACT	R24007	-.--	4722-1509-001	RES, 1% 1/8W 15.0 OHM *	00/00/00
ACT	R24008	4.00	4722-4750-001	RES, 1% 1/8W 475 OHM *	00/00/00
ACT	R24009	2.00	4722-4752-001	RES, 1% 1/8W 47.5K OHM *	00/00/00
ACT	R24010	-.--	4722-4750-001	RES, 1% 1/8W 475 OHM *	00/00/00
ACT	R24011	3.00	4722-2742-001	RES, 1% 1/8W 27.4K OHM *	00/00/00
ACT	R24012	-.--	4722-4750-001	RES, 1% 1/8W 475 OHM *	00/00/00
ACT	R24013	-.--	4722-2742-001	RES, 1% 1/8W 27.4K OHM *	00/00/00
ACT	R24014	3.00	4722-2740-001	RES, 1% 1/8W 274 OHM *	00/00/00
ACT	R24015	-.--	4722-2740-001	RES, 1% 1/8W 274 OHM *	00/00/00
ACT	R24016	3.00	4722-1829-001	RES, 1% 1/8W 18.2 OHM *	00/00/00
ACT	R24018	-.--	4722-4752-001	RES, 1% 1/8W 47.5K OHM *	00/00/00
ACT	R24019	1.00	4722-2214-001	RES, 1% 1/8W 2.21M OHM *	00/00/00
ACT	R24020	-.--	4722-4750-001	RES, 1% 1/8W 475 OHM *	00/00/00
ACT	R24021	1.00	4722-2212-001	RES, 1% 1/8W 22.1K OHM *	00/00/00
ACT	R24022	1.00	4749-0104-001	POT, 100K OHM, SIDE ADJ SMD	00/00/00
ACT	R24023	2.00	4722-1003-001	RES, 1% 1/8W 100K OHM *	00/00/00

ASSY NO. 7010-6830-400 | REVISION E1 | DESCRIPTION PCB ASSY, 1030MHZ SOURCE | LAST ECN 13684 | DATE INC 08/24/90

STAT	REF.DES.	QTY	COMP. PART NO.	DESCRIPTION	EFFECTIVE
ACT	R24024	-.--	4722-4759-001	RES, 1% 1/8W 47.5 OHM *	00/00/00
ACT	R24025	1.00	4749-0203-001	POT, 20K OHM, SIDE ADJ SMD	00/00/00
ACT	R24026	1.00	4749-0502-001	POT, 5K OHM, SIDE ADJ, SMD	00/00/00
ACT	R24027	1.00	4722-4751-001	RES, 1% 1/8W 4.75K OHM *	00/00/00
ACT	R24028	-.--	4722-1002-001	RES, 1% 1/8W 10.0K OHM *	00/00/00
ACT	R24030	1.00	4722-8251-001	RES, 1% 1/8W 8.25K OHM *	00/00/00
ACT	R24031	2.00	4722-3321-001	RES, 1% 1/8W 3.32K OHM *	00/00/00
ACT	R24032	-.--	4722-2740-001	RES, 1% 1/8W 274 OHM *	00/00/00
ACT	R24033	-.--	4722-1001-001	RES, 1% 1/8W 1.0K OHM *	00/00/00
ACT	R24034	1.00	4722-6819-001	RES, 1% 1/8W 68.1 OHM *	00/00/00
ACT	R24035	-.--	4722-1000-001	RES, 1% 1/8W 100 OHM *	00/00/00
ACT	R24036	2.00	4722-6812-001	RES, 1% 1/8W 68.1K OHM *	00/00/00
ACT	R24037	3.00	4722-6810-001	RES, 1% 1/8W 681 OHM *	00/00/00
ACT	R24038	-.--	4722-4759-001	RES, 1% 1/8W 47.5 OHM *	00/00/00
ACT	R24039	-.--	4722-1003-001	RES, 1% 1/8W 100K OHM *	00/00/00
ACT	R24040	-.--	4722-6810-001	RES, 1% 1/8W 681 OHM *	00/00/00
ACT	R24041	-.--	4722-4759-001	RES, 1% 1/8W 47.5 OHM *	00/00/00
ACT	R24042	1.00	4722-5621-001	RES, 1% 1/8W 5.62K OHM *	00/00/00
ACT	R24043	-.--	4722-6810-001	RES, 1% 1/8W 681 OHM *	00/00/00
ACT	R24044	-.--	4722-2742-001	RES, 1% 1/8W 27.4K OHM *	00/00/00
ACT	R24045	-.--	4722-4759-001	RES, 1% 1/8W 47.5 OHM *	00/00/00
ACT	R24046	1.00	4722-3320-001	RES, 1% 1/8W 332 OHM *	00/00/00
ACT	R24047	-.--	4722-6812-001	RES, 1% 1/8W 68.1K OHM *	00/00/00
ACT	R24048	-.--	4722-1501-001	RES, 1% 1/8W 1.50K OHM *	00/00/00
ACT	R24049	-.--	4722-3321-001	RES, 1% 1/8W 3.32K OHM *	00/00/00
ACT	R24050	-.--	4722-1000-001	RES, 1% 1/8W 100 OHM *	00/00/00

ASSY NO.	REVISION	DESCRIPTION	LAST ECN	DATE INC
7010-6830-400	E1	PCB ASSY, 1030MHZ SOURCE	13684	08/24/90

STAT	REF.DES.	QTY	COMP. PART NO.	DESCRIPTION	EFFECTIVE
ACT	R24051	-.--	4722-1509-001	RES, 1% 1/8W 15.0 OHM *	00/00/00
ACT	R24052	-.--	4722-1000-001	RES, 1% 1/8W 100 OHM *	00/00/00
ACT	R24053	-.--	4722-1509-001	RES, 1% 1/8W 15.0 OHM *	00/00/00
ACT	R24054	-.--	4722-1829-001	RES, 1% 1/8W 18.2 OHM *	00/00/00
ACT	R24055	-.--	4722-1829-001	RES, 1% 1/8W 18.2 OHM *	00/00/00
ACT	U24001	1.00	3133-0000-124	IC BIMOS CA3130 OP AMP SO *	00/00/00
ACT	Z24001	-.--	0004-0000-000	*** PRINTED ELEMENT ***	00/00/00
ACT	Z24002	-.--	0004-0000-000	*** PRINTED ELEMENT ***	00/00/00
ACT	Z24003	-.--	0004-0000-000	*** PRINTED ELEMENT ***	00/00/00
ACT	Z24004	-.--	0002-0000-000	*** REF DESIG NOT USED ***	00/00/00
ACT	Z24005	-.--	0004-0000-000	*** PRINTED ELEMENT ***	00/00/00
ACT	Z24006	-.--	0004-0000-000	*** PRINTED ELEMENT ***	00/00/00
ACT	Z24007	-.--	0002-0000-000	*** REF DESIG NOT USED ***	00/00/00
ACT	Z24008	-.--	0004-0000-000	*** PRINTED ELEMENT ***	00/00/00
ACT	Z24009	-.--	0004-0000-000	*** PRINTED ELEMENT ***	00/00/00
ACT	Z24010	-.--	0004-0000-000	*** PRINTED ELEMENT ***	00/00/00
ACT	Z24011	-.--	0002-0000-000	*** REF DESIG NOT USED ***	00/00/00
ACT	Z24012	-.--	0004-0000-000	*** PRINTED ELEMENT ***	00/00/00
ACT	Z24013	-.--	0004-0000-000	*** PRINTED ELEMENT ***	00/00/00
ACT	Z24014	-.--	0004-0000-000	*** PRINTED ELEMENT ***	00/00/00
ACT	Z24015	-.--	0004-0000-000	*** PRINTED ELEMENT ***	00/00/00
ACT	Z24016	-.--	0004-0000-000	*** PRINTED ELEMENT ***	00/00/00
ACT	Z24017	-.--	0004-0000-000	*** PRINTED ELEMENT ***	00/00/00
ACT	Z24018	-.--	0004-0000-000	*** PRINTED ELEMENT ***	00/00/00
ACT	Z24019	-.--	0004-0000-000	*** PRINTED ELEMENT ***	00/00/00
ACT	Z24020	-.--	0004-0000-000	*** PRINTED ELEMENT ***	00/00/00

ASSY NO.	REVISION	DESCRIPTION	LAST ECN	DATE INC
7010-6830-400	E1	PCB ASSY, 1030MHZ SOURCE	13684	08/24/90

STAT	REF.DES.	QTY	COMP. PART NO.	DESCRIPTION	EFFECTIVE
ACT	Z24021	-.--	0004-0000-000	*** PRINTED ELEMENT ***	00/00/00
ACT	Z24022	-.--	0004-0000-000	*** PRINTED ELEMENT ***	00/00/00
ACT	Z24023	-.--	0004-0000-000	*** PRINTED ELEMENT ***	00/00/00
ACT	Z24024	-.--	0004-0000-000	*** PRINTED ELEMENT ***	00/00/00
ACT	Z24025	-.--	0004-0000-000	*** PRINTED ELEMENT ***	00/00/00
ACT	Z24026	-.--	0004-0000-000	*** PRINTED ELEMENT ***	00/00/00
ACT	Z24027	-.--	0004-0000-000	*** PRINTED ELEMENT ***	00/00/00
ACT	Z24028	-.--	0004-0000-000	*** PRINTED ELEMENT ***	00/00/00

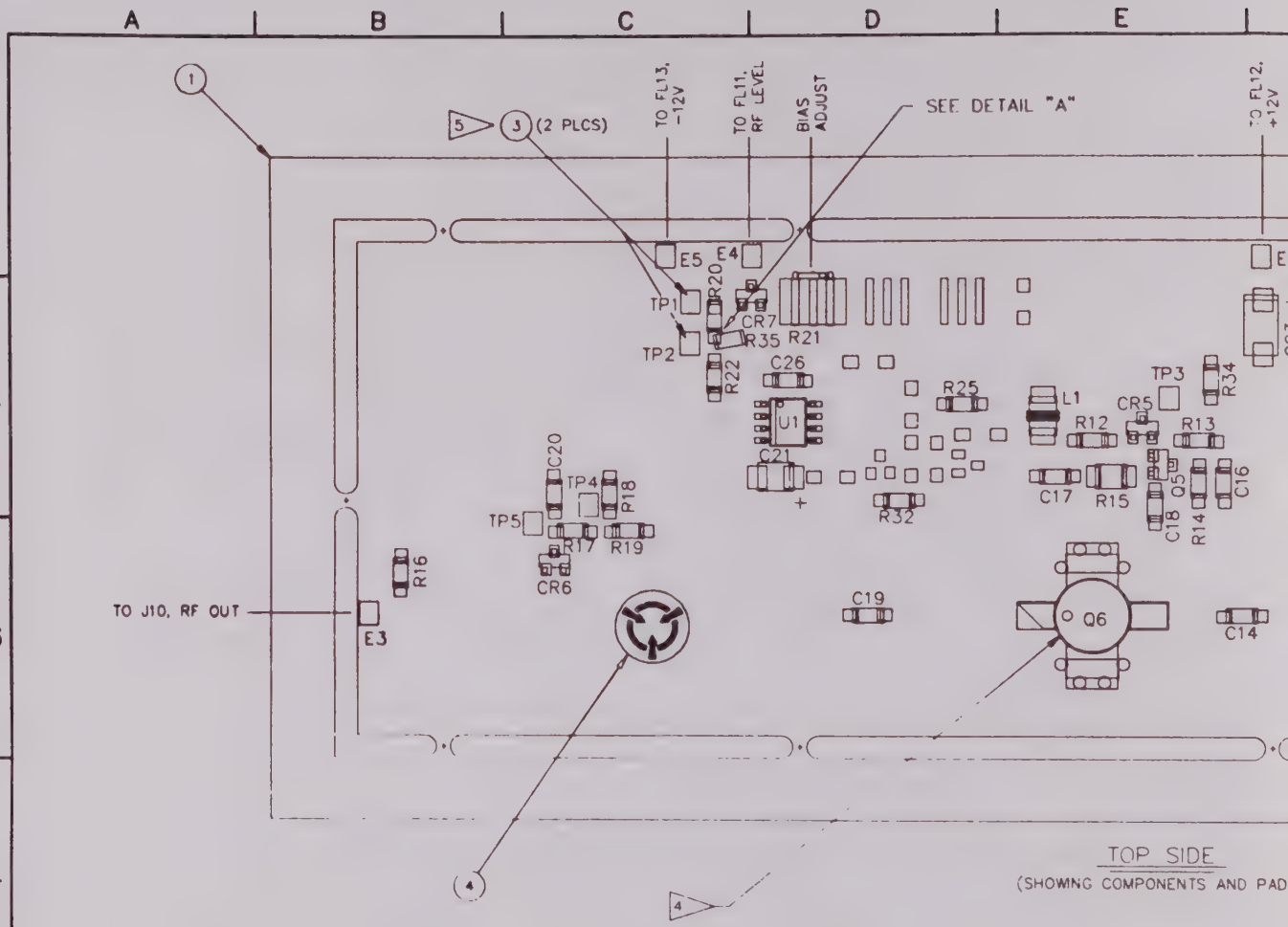

TOP SIDE
(SHOWING COMPONENTS AND PAD

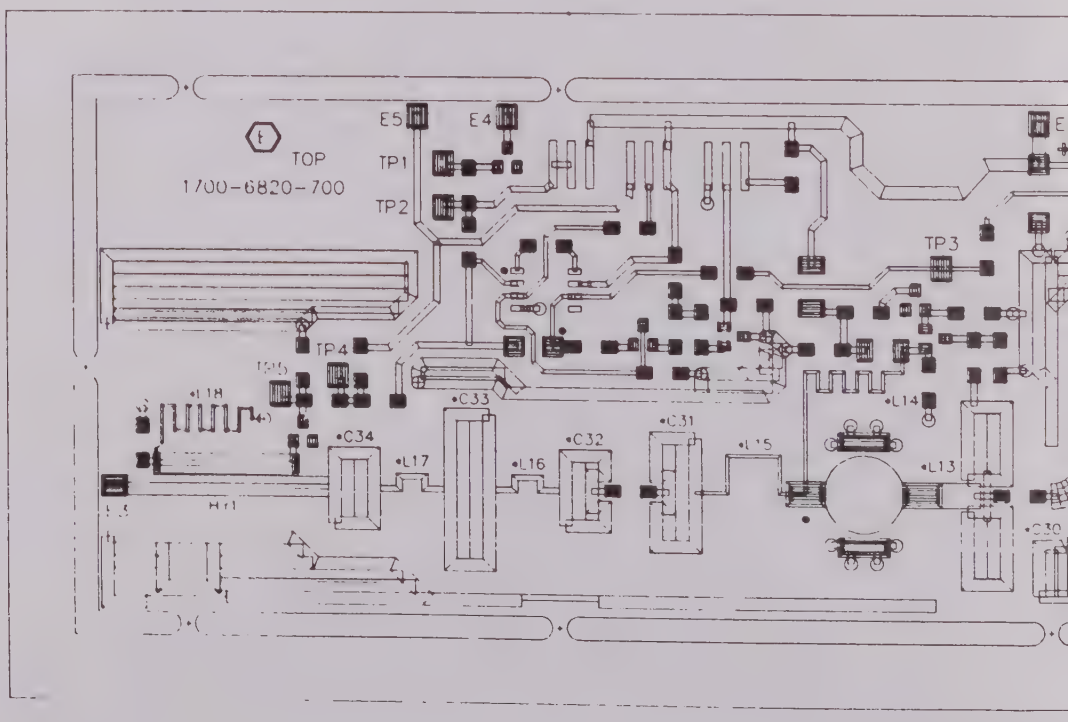

TOP SIDE
(SHOWING PADS AND TRACES)

DATE	REV	CHANGE	APVD
5/7/91	E	DESIGN RELEASE	SL

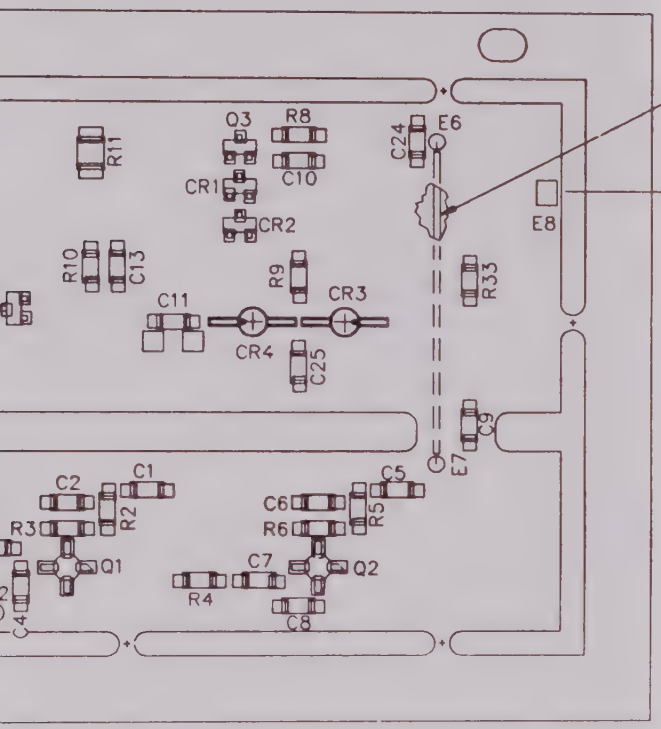

NOTES:

1. ALL REFERENCE DESIGNATORS CARRY AN ASSIGNED DESIGNATOR SERIES. THIS DWG. CARRIES SERIES 27000 (i.e., R1 IS R27001).
2. JUMPER WIRE (ITEM 2) ON BOTTOM SIDE.
3. ASTERISK (•) INDICATES PRINTED ELEMENTS.
4. INSTALL Q6 BY HAND AFTER REFLOW.
5. TYPICAL, TP1 & TP2:

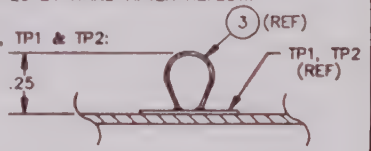

6. REF. SCHEM. 0000-8840-700.

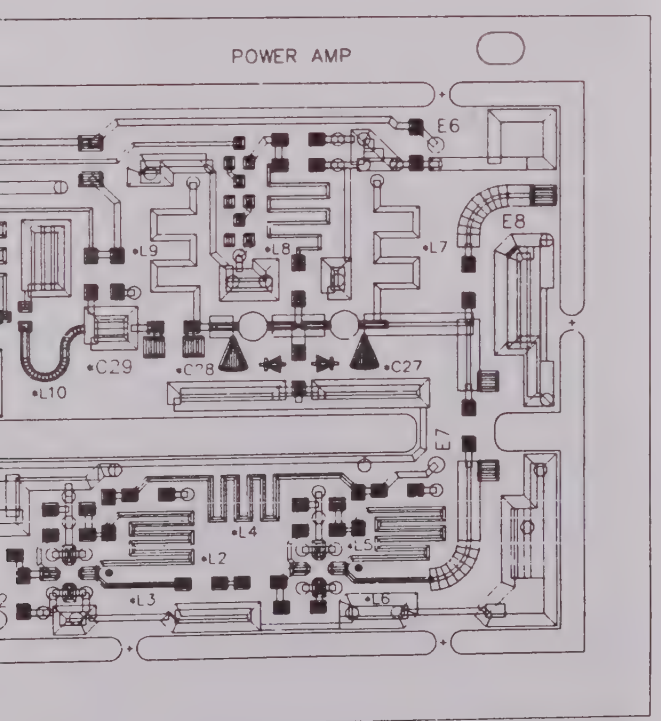

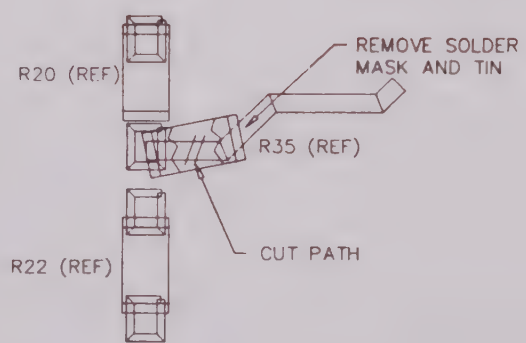

DETAIL "A"
N.T.S.

CAUTION:
CONTAINS PARTS AND ASSEMBLIES SUSCEPTIBLE TO DAMAGE BY ELECTROSTATIC DISCHARGE (ESD).

DRAWN: SIGLER 1-26-91	IFR SYSTEMS INC	
CHECKED: 5/7/91	TITLE: PCB ASS'Y POWER AMP	
APPROVED: 5/20/91	SIZE: D	DWG. NO.: 7010-8830-700
	REV: E	
SCALE: 3:1	DO NOT SCALE	FSCM: 51190 SHEET 1 OF 1

PRINT DATE 91/06/19 BILL OF MATERIAL LISTED BY REF. DESIG. PAGE 1

ASSY NO.	REVISION	DESCRIPTION	LAST ECN	DATE INC
7010-8830-700	E	PCB ASSY, PWR AMP		10/30/71

STAT	REF.DES.	QTY	COMP. PART NO.	DESCRIPTION	EFFECTIVE
ACT	*01	1.00	1700-6820-700	PC BD,POWER AMP	00/00/00
ACT	*02	.25	6003-0000-003	WIRE,HOOK,TFE,26GA, 7S,RED	00/00/00
ACT	*03	.00	1050-0000-075	WIRE,BUS,TINNED COPPER,26GA	00/00/00
ACT	*04	1.00	2400-7856-800	LABEL,ESD	00/00/00
ACT	C27001	3.00	1622-0103-001	CAP, UF .01, 50V, CHIP X7R *	00/00/00
ACT	C27002	3.00	1622-0220-001	CAP, PF 22, 100V, CHIP NPO *	00/00/00
ACT	C27003	3.00	1622-0030-001	CAP, PF 3.0, 50V CHIP *	00/00/00
ACT	C27004	2.00	1622-0159-001	CAP, PF 1.5, 50V, CHIP NPO *	00/00/00
ACT	C27005	-.--	1622-0103-001	CAP, UF .01, 50V, CHIP X7R *	00/00/00
ACT	C27006	-.--	1622-0220-001	CAP, PF 22, 100V, CHIP NPO *	00/00/00
ACT	C27007	-.--	1622-0030-001	CAP, PF 3.0, 50V CHIP *	00/00/00
ACT	C27008	-.--	1622-0159-001	CAP, PF 1.5, 50V, CHIP NPO *	00/00/00
ACT	C27009	-.--	1622-0220-001	CAP, PF 22, 100V, CHIP NPO *	00/00/00
ACT	C27010	1.00	1622-0050-001	CAP, pF 5.0 50V CHIP *	00/00/00
ACT	C27011	3.00	1622-0399-001	CAP,pF 3.9 100V CHIP *	00/00/00
ACT	C27012	12.00	0002-0000-000	*** REF DESIG NOT USED ***	00/00/00
ACT	C27013	3.00	1622-0100-001	CAP,PF 10 50V CHIP	00/00/00
ACT	C27014	-.--	1622-0399-001	CAP,pF 3.9 100V CHIP *	00/00/00
ACT	C27015	-.--	0002-0000-000	*** REF DESIG NOT USED ***	00/00/00
ACT	C27016	1.00	1622-0221-001	CAP,PF 220 50V CHIP	00/00/00
ACT	C27017	1.00	1622-0182-001	CAP, pF 1800 50V CHIP *	00/00/00
ACT	C27018	-.--	1622-0100-001	CAP,PF 10 50V CHIP	00/00/00
ACT	C27019	-.--	1622-0399-001	CAP,pF 3.9 100V CHIP *	00/00/00
ACT	C27020	-.--	1622-0100-001	CAP,PF 10 50V CHIP	00/00/00
ACT	C27021	1.00	1507-0105-123	CAP, UF 1.0, 35V, TANT CHIP *	00/00/00
ACT	C27022	-.--	0002-0000-000	*** REF DESIG NOT USED ***	00/00/00

ASSY NO.	REVISION	DESCRIPTION	LAST ECN	DATE INC
7010-8830-700	E	PCB ASSY, PWR AMP		10/30/71

STAT	REF.DES.	QTY	COMP. PART NO.	DESCRIPTION		EFFECTIVE
ACT	C27023	1.00	1621-0106-016	CAP, UF 10, 16V, TANT SMD	*	00/00/00
ACT	C27024	-.--	1622-0103-001	CAP, UF .01, 50V, CHIP X7R	*	00/00/00
ACT	C27025	-.--	1622-0030-001	CAP, PF 3.0, 50V CHIP	*	00/00/00
ACT	C27026	1.00	1622-0680-001	CAP,PF 68, 100V,CHIP		00/00/00
ACT	C27027	26.00	0004-0000-000	*** PRINTED ELEMENT ***		00/00/00
ACT	C27028	-.--	0004-0000-000	*** PRINTED ELEMENT ***		00/00/00
ACT	C27029	-.--	0004-0000-000	*** PRINTED ELEMENT ***		00/00/00
ACT	C27030	-.--	0004-0000-000	*** PRINTED ELEMENT ***		00/00/00
ACT	C27031	-.--	0004-0000-000	*** PRINTED ELEMENT ***		00/00/00
ACT	C27032	-.--	0004-0000-000	*** PRINTED ELEMENT ***		00/00/00
ACT	C27033	-.--	0004-0000-000	*** PRINTED ELEMENT ***		00/00/00
ACT	C27034	-.--	0004-0000-000	*** PRINTED ELEMENT ***		00/00/00
ACT	CR27001	3.00	4818-0000-025	DIODE,1S2836,H/S SWITCHING		00/00/00
ACT	CR27002	-.--	4818-0000-025	DIODE,1S2836,H/S SWITCHING		00/00/00
ACT	CR27003	2.00	4828-0000-011	DIODE,AP700D-850,PIN SMD		00/00/00
ACT	CR27004	-.--	4828-0000-011	DIODE,AP700D-850,PIN SMD		00/00/00
ACT	CR27005	-.--	4818-0000-025	DIODE,1S2836,H/S SWITCHING		00/00/00
ACT	CR27006	2.00	4816-0000-005	DIODE, HSMS-2800, SOT-23		00/00/00
ACT	CR27007	-.--	4816-0000-005	DIODE, HSMS-2800, SOT-23		00/00/00
ACT	HY27001	-.--	0004-0000-000	*** PRINTED ELEMENT ***		00/00/00
ACT	L27001	1.00	1811-0153-003	IND,SM 15UH 10% C 1812	*	00/00/00
ACT	L27002	-.--	0004-0000-000	*** PRINTED ELEMENT ***		00/00/00
ACT	L27003	-.--	0004-0000-000	*** PRINTED ELEMENT ***		00/00/00
ACT	L27004	-.--	0004-0000-000	*** PRINTED ELEMENT ***		00/00/00
ACT	L27005	-.--	0004-0000-000	*** PRINTED ELEMENT ***		00/00/00
ACT	L27006	-.--	0004-0000-000	*** PRINTED ELEMENT ***		00/00/00

ASSY NO. 7010-8830-700 | REVISION E | DESCRIPTION PCB ASSY, PWR AMP | LAST ECN | DATE INC 10/30/71

STAT	REF.DES.	QTY	COMP. PART NO.	DESCRIPTION	EFFECTIVE
ACT	L27007	-.--	0004-0000-000	*** PRINTED ELEMENT ***	00/00/00
ACT	L27008	-.--	0004-0000-000	*** PRINTED ELEMENT ***	00/00/00
ACT	L27009	-.--	0004-0000-000	*** PRINTED ELEMENT ***	00/00/00
ACT	L27010	-.--	0004-0000-000	*** PRINTED ELEMENT ***	00/00/00
ACT	L27011	-.--	0004-0000-000	*** PRINTED ELEMENT ***	00/00/00
ACT	L27012	-.--	0004-0000-000	*** PRINTED ELEMENT ***	00/00/00
ACT	L27013	-.--	0004-0000-000	*** PRINTED ELEMENT ***	00/00/00
ACT	L27014	-.--	0004-0000-000	*** PRINTED ELEMENT ***	00/00/00
ACT	L27015	-.--	0004-0000-000	*** PRINTED ELEMENT ***	00/00/00
ACT	L27016	-.--	0004-0000-000	*** PRINTED ELEMENT ***	00/00/00
ACT	L27017	-.--	0004-0000-000	*** PRINTED ELEMENT ***	00/00/00
ACT	L27018	-.--	0004-0000-000	*** PRINTED ELEMENT ***	00/00/00
ACT	Q27001	2.00	5010-0203-100	TRANS,HXTR NPN HF AMP *	00/00/00
ACT	Q27002	-.--	5010-0203-100	TRANS,HXTR NPN HF AMP *	00/00/00
ACT	Q27003	2.00	4809-0000-020	TRANS, 3906, PNP SMD	00/00/00
ACT	Q27004	1.00	4809-0000-035	TRANS,RF NPN LO PWR SOT-23 *	00/00/00
ACT	Q27005	-.--	4809-0000-020	TRANS, 3906, PNP SMD	00/00/00
ACT	Q27006	1.00	5010-0503-000	TRANS,MRF1000MB,NPN PWR HF AMP	00/00/00
ACT	R27001	1.00	4722-4759-001	RES, 1% 1/8W 47.5 OHM *	00/00/00
ACT	R27002	3.00	4722-4750-001	RES, 1% 1/8W 475 OHM *	00/00/00
ACT	R27003	4.00	4722-4752-001	RES, 1% 1/8W 47.5K OHM *	00/00/00
ACT	R27004	1.00	4722-2749-001	RES, 1% 1/8W 27.4 OHM *	00/00/00
ACT	R27005	-.--	4722-4750-001	RES, 1% 1/8W 475 OHM *	00/00/00
ACT	R27006	-.--	4722-4752-001	RES, 1% 1/8W 47.5K OHM *	00/00/00
ACT	R27007	-.--	0002-0000-000	*** REF DESIG NOT USED ***	00/00/00
ACT	R27008	1.00	4722-1822-001	RES, 1% 1/8W 18.2K OHM *	00/00/00

ASSY NO. 7010-8830-700 | REVISION E | DESCRIPTION PCB ASSY, PWR AMP | LAST ECN | DATE INC 10/30/71

STAT	REF.DES.	QTY	COMP. PART NO.	DESCRIPTION	EFFECTIVE
ACT	R27009	2.00	4722-3320-001	RES, 1% 1/8W 332 OHM *	00/00/00
ACT	R27010	1.00	4722-3321-001	RES, 1% 1/8W 3.32K OHM *	00/00/00
ACT	R27011	1.00	4721-0101-003	RES,5, 1/4W 100 OHM CHIP *	00/00/00
ACT	R27012	-.--	4722-3320-001	RES, 1% 1/8W 332 OHM *	00/00/00
ACT	R27013	1.00	4722-5621-001	RES, 1% 1/8W 5.62K OHM *	00/00/00
ACT	R27014	1.00	4722-1501-001	RES, 1% 1/8W 1.50K OHM *	00/00/00
ACT	R27015	1.00	4721-0479-003	RES, 5, 1/4W, 4.7 OHM, CHIP	00/00/00
ACT	R27016	1.00	4722-5119-001	RES, 1% 1/8W 51.1 OHM *	00/00/00
ACT	R27017	2.00	4722-1002-001	RES, 1% 1/8W 10.0K OHM *	00/00/00
ACT	R27018	1.00	4722-5623-001	RES, 1% 1/8W 562K OHM *	00/00/00
ACT	R27019	-.--	4722-4752-001	RES, 1% 1/8W 47.5K OHM *	00/00/00
ACT	R27020	-.--	4722-1002-001	RES, 1% 1/8W 10.0K OHM *	00/00/00
ACT	R27021	1.00	4749-0104-001	POT, 100K OHM, SIDE ADJ SMD	00/00/00
ACT	R27022	-.--	4722-4752-001	RES, 1% 1/8W 47.5K OHM *	00/00/00
ACT	R27023	-.--	0002-0000-000	*** REF DESIG NOT USED ***	00/00/00
ACT	R27024	-.--	0002-0000-000	*** REF DESIG NOT USED ***	00/00/00
ACT	R27025	2.00	4722-2211-001	RES, 1% 1/8W 2.21K OHM *	00/00/00
ACT	R27026	-.--	0002-0000-000	*** REF DESIG NOT USED ***	00/00/00
ACT	R27027	-.--	0002-0000-000	*** REF DESIG NOT USED ***	00/00/00
ACT	R27028	-.--	0002-0000-000	*** REF DESIG NOT USED ***	00/00/00
ACT	R27029	-.--	0002-0000-000	*** REF DESIG NOT USED ***	00/00/00
ACT	R27030	-.--	0002-0000-000	*** REF DESIG NOT USED ***	00/00/00
ACT	R27031	-.--	0002-0000-000	*** REF DESIG NOT USED ***	00/00/00
ACT	R27032	1.00	4722-2212-001	RES, 1% 1/8W 22.1K OHM *	00/00/00
ACT	R27033	-.--	4722-4750-001	RES, 1% 1/8W 475 OHM *	00/00/00
ACT	R27034	-.--	4722-2211-001	RES, 1% 1/8W 2.21K OHM *	00/00/00

ASSY NO.	REVISION	DESCRIPTION	LAST ECN	DATE INC
7010-8830-700	E	PCB ASSY, PWR AMP		10/30/71

STAT	REF.DES.	QTY	COMP. PART NO.	DESCRIPTION	EFFECTIVE
ACT	R27035	1.00	4722-5113-001	RES, 1% 1/8W 511K OHM *	00/00/00
ACT	TP27001	5.00	0003-0000-000	***** FOR REFERENCE ONLY *****	00/00/00
ACT	TP27002	-.--	0003-0000-000	***** FOR REFERENCE ONLY *****	00/00/00
ACT	TP27003	-.--	0003-0000-000	***** FOR REFERENCE ONLY *****	00/00/00
ACT	TP27004	-.--	0003-0000-000	***** FOR REFERENCE ONLY *****	00/00/00
ACT	TP27005	-.--	0003-0000-000	***** FOR REFERENCE ONLY *****	00/00/00
ACT	U27001	1.00	3133-0000-124	IC BIMOS CA3130 OP AMP SO *	00/00/00

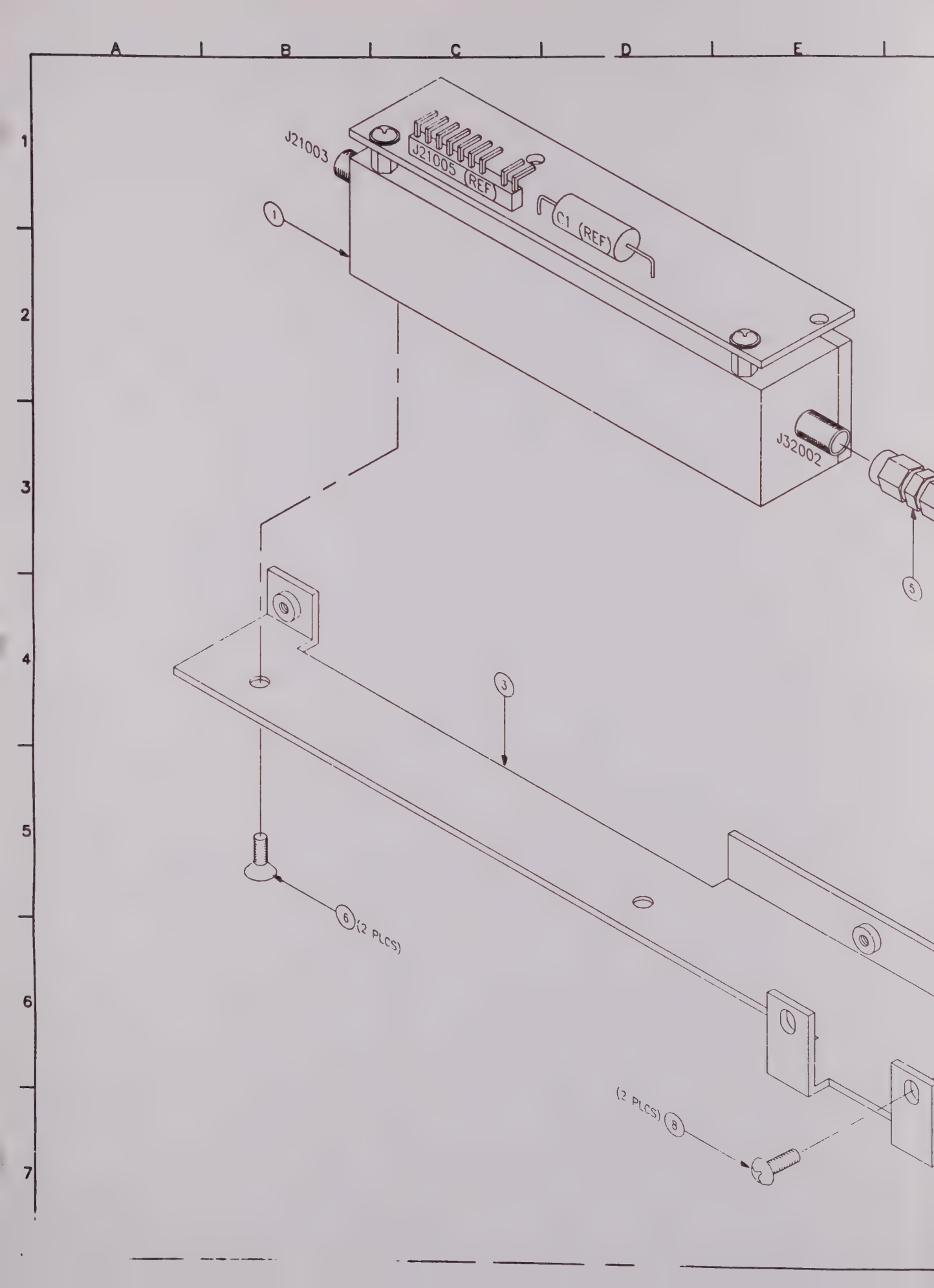
A
B
C
D
E
1
2
3
4
5
6
7
J21003
J21005 (REF)
C1 (REF)
J32002
1
3
5
6 (2 PLCS)
(2 PLCS) 8

DATE	REV	CHANGE	APVD
5-23-91	-A-	DESIGN RELEASE	SL

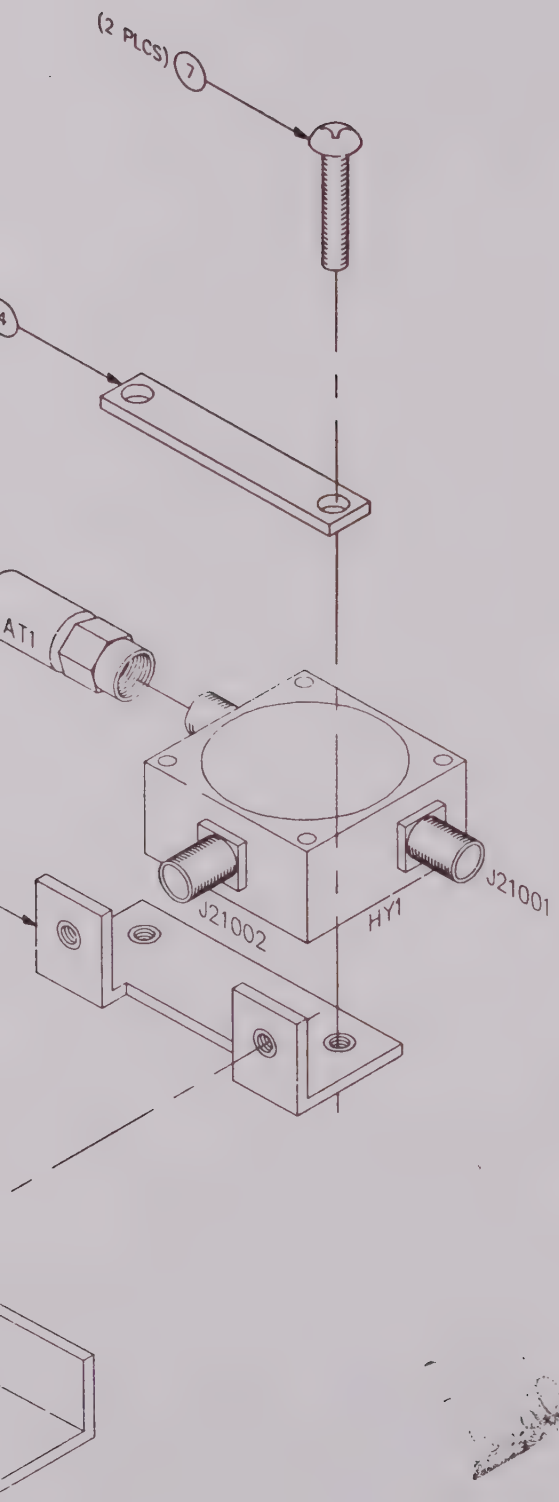

NOTES:

1. REF. DES. SERIES: 21000
2. REFERENCE SCHEMATIC 0000-8841-200

MAY 29 1991 ENGINEERING

CAUTION:
CONTAINS PARTS AND ASSEMBLIES SUSCEPTIBLE TO DAMAGE BY ELECTROSTATIC DISCHARGE (ESD).

	IFR SYSTEMS INC 10200 West York St. Wichita, Kansas 67215
DRAWN SIGLER 3-8-91	TITLE MECHANICAL ASSEMBLY, ATTENUATOR
CHECKED R. CRAWFORD 4-30-91	
APPROVED P.R. HARRIS 5-23-91	SIZE D; DWG. NO. 7005-8841-200; REV A
	SCALE: 2:1; DO NOT SCALE; CAGE 51190; SHEET 1 OF 1

PRINT DATE 91/06/19 BILL OF MATERIAL LISTED BY REF. DESIG. PAGE 1 STA

ASSY NO.	REVISION	DESCRIPTION	LAST ECN	DATE INC
7005-8841-200	A	MECH ASSY,ATTENUATOR		10/30/71

STAT	REF.DES.	QTY	COMP. PART NO.	DESCRIPTION	EFFECTIVE
ACT	*01	1.00	7010-8831-200	PCB ASSY,ATTEN. DRIVER	00/00/00
ACT	*02	1.00	1400-8850-500	BRACKET,CIRCULATOR	00/00/00
ACT	*03	1.00	1400-8850-000	BRKT,ATTENUATOR	00/00/00
ACT	*04	1.00	1400-8850-600	BRACKET,CIRCULATOR RETAINER	00/00/00
ACT	*05	1.00	2200-0110-200	CONN,ADAPT,M2M SMA,STRAIGHT	00/00/00
ACT	*06	2.00	2803-0188-003	SCREW,4-40 X 3/16 PFHM	00/00/00
ACT	*07	2.00	2803-0625-006	SCREW,4-40 X 5/8 PPHM	00/00/00
ACT	*08	2.00	2803-0250-006	SCREW,4-40 X 1/4 PPHM	00/00/00
ACT	AT21002	1.00	2901-0105-006	ATTEN, 6DB, 1W,SMA, 2.0GHZ	00/00/00
ACT	HY21001	1.00	3401-0100-300	CIRCULATOR, 1.03-1.09GHZ *	00/00/00

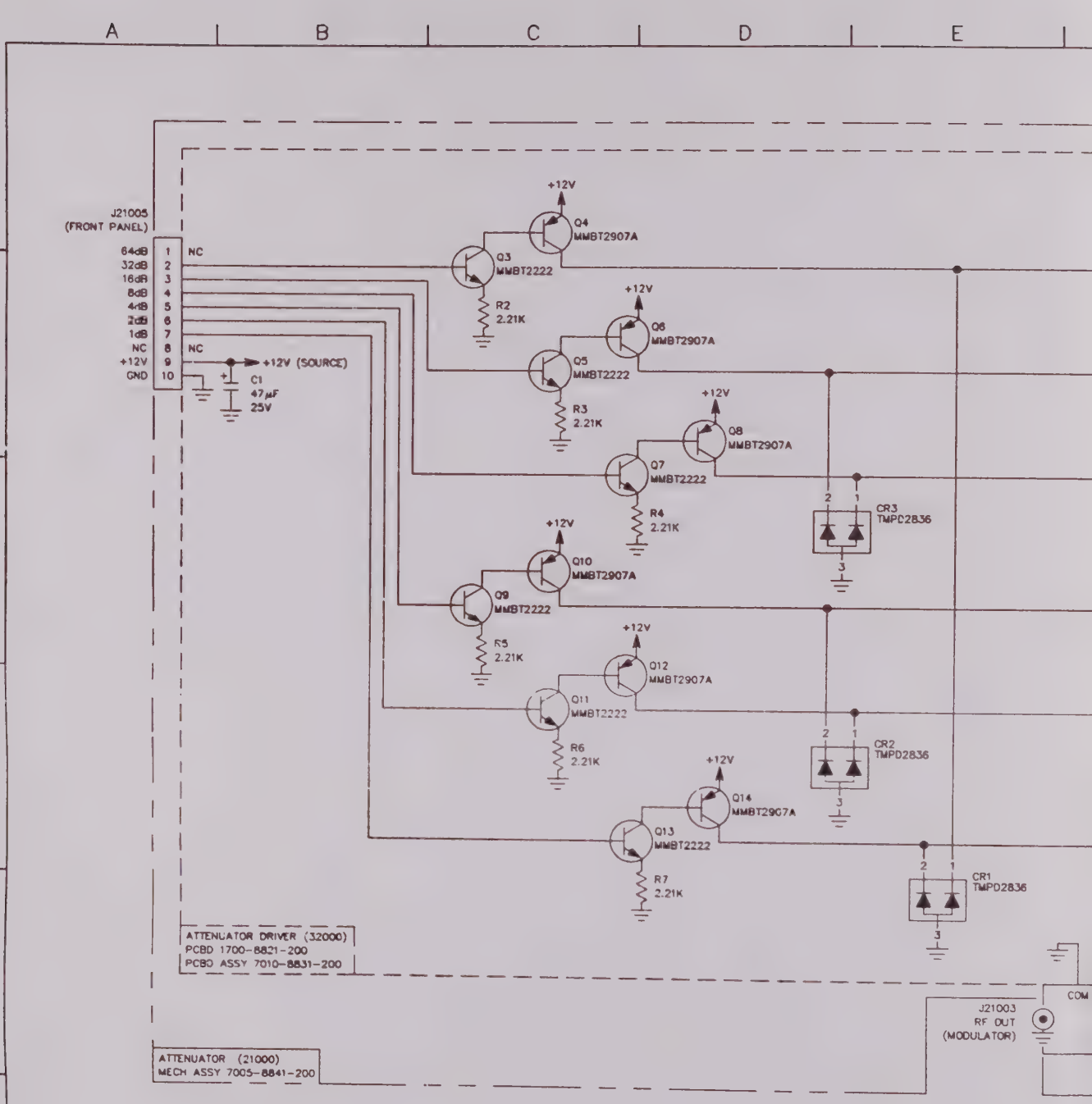
A
B
C
D
E
1
2
3
4
5
6
J21005
(FRONT PANEL)
64dB 1
32dB 2
16dB 3
8dB 4
4dB 5
2dB 6
1dB 7
NC 8
+12V 9
GND 10
NC
NC
+12V (SOURCE)
C1
47µF
25V
+12V
Q4
MMBT2907A
Q3
MMBT2222
R2
2.21K
Q6
MMBT2907A
Q5
MMBT2222
R3
2.21K
Q8
MMBT2907A
Q7
MMBT2222
R4
2.21K
CR3
TMPD2836
Q10
MMBT2907A
Q9
MMBT2222
R5
2.21K
Q12
MMBT2907A
Q11
MMBT2222
R6
2.21K
CR2
TMPD2836
Q14
MMBT2907A
Q13
MMBT2222
R7
2.21K
CR1
TMPD2836
ATTENUATOR DRIVER (32000)
PCBD 1700-8821-200
PCBD ASSY 7010-8831-200
ATTENUATOR (21000)
MECH ASSY 7005-8841-200
J21003
RF OUT
(MODULATOR)
COM

G H J K L

DATE	REV	CHANGE	APVD
5-23-91	A	DESIGN RELEASE RGC	SL

NOTES:
(UNLESS OTHERWISE SPECIFIED)

1. ALL REFERENCE NUMBERS CARRY AN ASSIGNED DESIGNATOR SERIES.
   THIS SCHEMATIC CARRIES SERIES: (32000)
2. ALL RESISTORS ARE 1%, 1/8W.
3. ALL RESISTANCE IS EXPRESSED IN OHMS.
   ALL CAPACITANCE IS EXPRESSED IS MICROFARADS.
4. HIGHEST REFERENCE DESIGNATIONS.
   C1, CR4, J1, Q14, R7.
5. REFERENCE DESIGNATIONS NOT USED.
   CR4, Q1, Q2, R1.

CAUTION:
CONTAINS PARTS AND ASSEMBLIES SUSCEPTIBLE TO DAMAGE BY ELECTROSTATIC DISCHARGE (ESD).

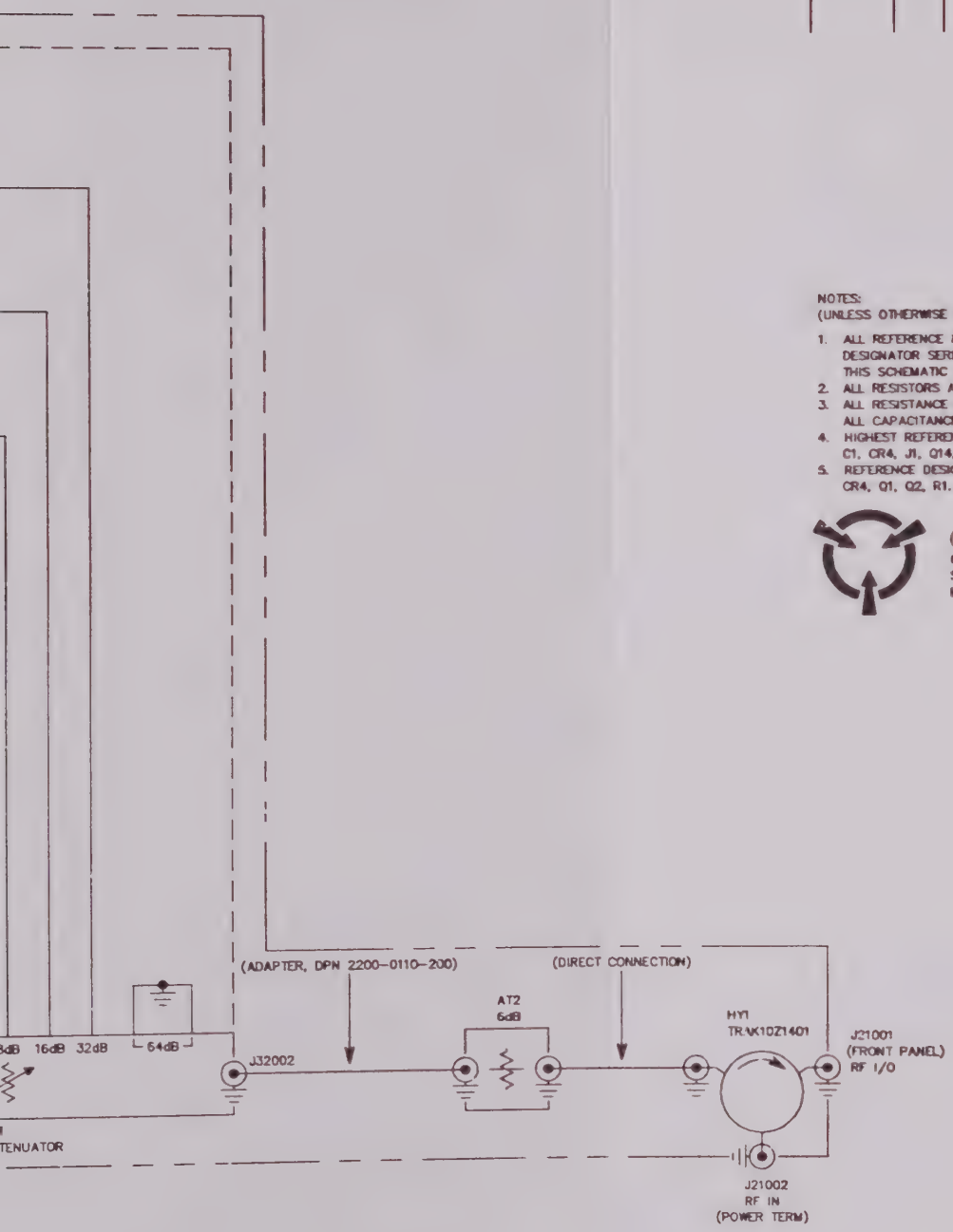

		IFR SYSTEMS INC
DRAWN R.CHAPMAN 3-26-91	TITLE	CIRCUIT SCHEMATIC MECH ASSY, ATTENUATOR
CHECKED R.CRAWFORD 4-30-91		
APPROVED P.R.HARRIS 5-23-91	SIZE D	DWG. NO. 0000-8841-200 REV A
	SCALE	DO NOT SCALE FSCM 51190 SHEET 1 OF 1

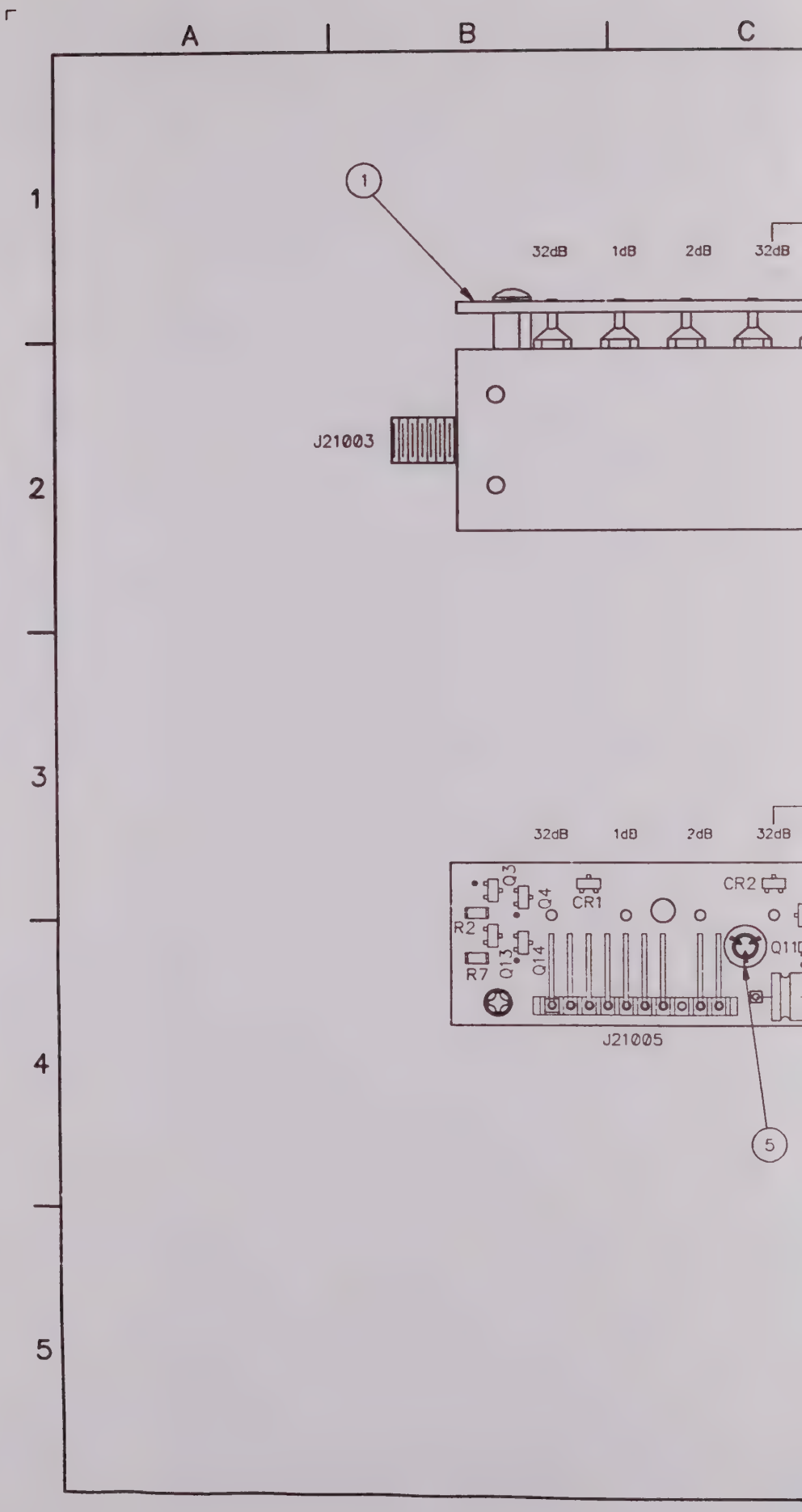
A
B
C
1
2
3
4
5
1
32dB
1dB
2dB
32dB
J21003
32dB
1dB
2dB
32dB
CR2
Q3
Q4
CR1
R2
Q13
Q14
R7
Q11
J21005
5

DATE	REV	CHANGE	APVD
5-22-91	A	DESIGN RELEASE	SL

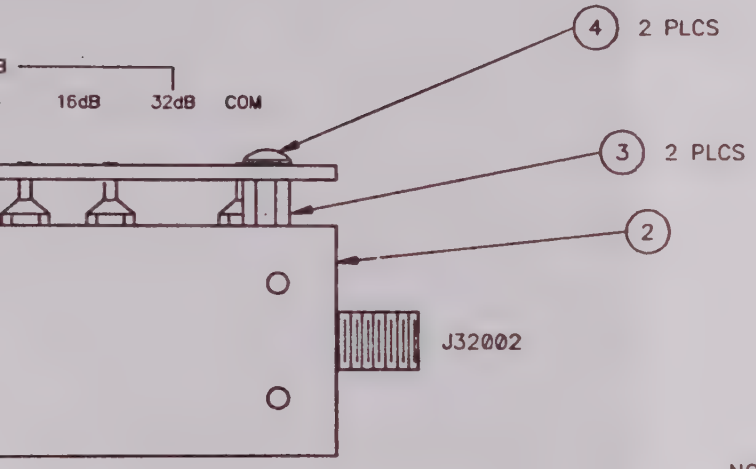

NOTES:

1. ALL REFERENCE DESIGNATORS CARRY AN ASSIGNED DESIGNATOR SERIES, THIS DWG. CARRIES SERIES 32000 (i.e., R1 IS R32001).

2. REFERENCE SCHEMATIC: 0000-8841-200

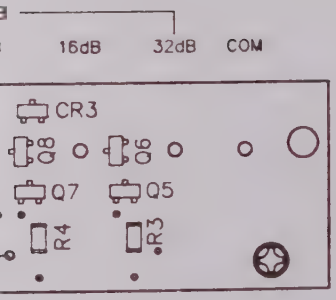

CAUTION:
CONTAINS PARTS AND ASSEMBLIES SUSCEPTIBLE TO DAMAGE BY ELECTROSTATIC DISCHARGE (ESD).

TOLERANCES: (UNLESS OTHERWISE SPECIFIED)	MATERIAL
ALL DIMENSIONS APPLY AFTER FINISH DECIMALS: .XXX= ± ANGLES: ±1/2DEG. SURFACE FINISH: 125 √ REMOVE ALL BURRS .XXXX= ±	FINISH
IFR SYSTEMS INC 18200 West York St., Wichita, Kansas 67215	
DRAWN WAW DATE 2-22-91	TITLE PC BOARD ASSY ATTENUATOR DRIVER, W/MLD
CHECKED [signature] DATE 4-30-91	
APPROVED [signature] DATE 4-30-91	SIZE C · DWG. NO. 7010-8831-200 · REV A
	SCALE: 2:1 · DO NOT SCALE · FSCM 51190 · SHEET 1 OF 1

PRINT DATE 91/06/19 BILL OF MATERIAL LISTED BY REF. DESIG. PAGE 1

ASSY NO.	REVISION	DESCRIPTION	LAST ECN	DATE INC
7010-8831-200	A	PCB ASSY,ATTEN. DRIVER		10/30/71

STAT	REF.DES.	QTY	COMP. PART NO.	DESCRIPTION	EFFECTIVE
ACT	*01	1.00	1700-8821-200	PC BD, ATTENUATOR DRIVER	00/00/00
ACT	*02	1.00	2901-7633-000	ATTEN,STEP,1-127DB,1W,SMA,PROG	00/00/00
ACT	*03	2.00	2850-7601-301	SCREW,.188L4-40.19HH,4-40X.300	00/00/00
ACT	*04	2.00	2803-0188-006	SCREW,4-40 X 3/16 PPHM	00/00/00
ACT	*05	1.00	2400-7856-800	LABEL,ESD	00/00/00
ACT	C32001	1.00	1580-4700-215	CAP,UF 47, 25V,ELE, 30	00/00/00
ACT	CR32001	3.00	4818-0000-025	DIODE,1S2836,H/S SWITCHING	00/00/00
ACT	CR32002	-.--	4818-0000-025	DIODE,1S2836,H/S SWITCHING	00/00/00
ACT	CR32003	-.--	4818-0000-025	DIODE,1S2836,H/S SWITCHING	00/00/00
ACT	J21005	1.00	2115-0000-020	WAFER,PCB,.100C,R.A,10-P	00/00/00
ACT	Q32003	6.00	4801-0000-006	TRANS,2N2222,NPN HS SW,*SOT*	00/00/00
ACT	Q32004	6.00	4805-0000-004	TRANS,2N2907A,G/P PNP SOT-23	00/00/00
ACT	Q32005	-.--	4801-0000-006	TRANS,2N2222,NPN HS SW,*SOT*	00/00/00
ACT	Q32006	-.--	4805-0000-004	TRANS,2N2907A,G/P PNP SOT-23	00/00/00
ACT	Q32007	-.--	4801-0000-006	TRANS,2N2222,NPN HS SW,*SOT*	00/00/00
ACT	Q32008	-.--	4805-0000-004	TRANS,2N2907A,G/P PNP SOT-23	00/00/00
ACT	Q32009	-.--	4801-0000-006	TRANS,2N2222,NPN HS SW,*SOT*	00/00/00
ACT	Q32010	-.--	4805-0000-004	TRANS,2N2907A,G/P PNP SOT-23	00/00/00
ACT	Q32011	-.--	4801-0000-006	TRANS,2N2222,NPN HS SW,*SOT*	00/00/00
ACT	Q32012	-.--	4805-0000-004	TRANS,2N2907A,G/P PNP SOT-23	00/00/00
ACT	Q32013	-.--	4801-0000-006	TRANS,2N2222,NPN HS SW,*SOT*	00/00/00
ACT	Q32014	-.--	4805-0000-004	TRANS,2N2907A,G/P PNP SOT-23	00/00/00
ACT	R32002	6.00	4722-2211-001	RES, 1% 1/8W 2.21K OHM *	00/00/00
ACT	R32003	-.--	4722-2211-001	RES, 1% 1/8W 2.21K OHM *	00/00/00
ACT	R32004	-.--	4722-2211-001	RES, 1% 1/8W 2.21K OHM *	00/00/00
ACT	R32005	-.--	4722-2211-001	RES, 1% 1/8W 2.21K OHM *	00/00/00

ASSY NO.	REVISION	DESCRIPTION	LAST ECN	DATE INC
7010-8831-200	A	PCB ASSY,ATTEN. DRIVER		10/30/71

STAT	REF.DES.	QTY	COMP. PART NO.	DESCRIPTION			EFFECTIVE
ACT	R32006	-.--	4722-2211-001	RES, 1% 1/8W	2.21K	OHM *	00/0 /00
ACT	R32007	-.--	4722-2211-001	RES, 1% 1/8W	2.21K	OHM *	00/0 /00

APPENDIX A - CONNECTOR PIN-OUT TABLES

1. Table of S-1403C I/O Connectors

CONNECTOR	SIGNAL NAME	SIGNAL TYPE	INPUT/OUTPUT
FRONT PANEL			
J10001	UUT XMTR	50 Ω	OUTPUT
J10002	ANT B	50 Ω	INPUT/OUTPUT
PULSE PC BOARD ASSEMBLY			
J10003	EXT MOD	TTL	INPUT
J10004	EXT SYNC	TTL	INPUT
J10005	ATCRBS DISC	TTL	OUTPUT
J10006	BVIDEO	TTL	OUTPUT
J10007	SCOPE TRIG	TTL	OUTPUT
J10008	EXT SYNC	TTL	OUTPUT
J10009	PREPULSE	TTL	OUTPUT
J10010	AUXILIARY	VARIOUS	INPUT/OUTPUT
J10013	RF VERNIER	0 TO 7 Vdc	OUTPUT
J10014	MEASURE GATE	TTL	OUTPUT
J10015	DPSK	BIPOLAR	OUTPUT
PROCESSOR PC BOARD ASSEMBLY			
J10011	IFR BUS	TTL	INPUT/OUTPUT
J10012	TEST	RS-232C	INPUT/OUTPUT

2. S-1403C AUXILIARY Connector (J10010) (To ATC-1400A, J6) Pin-Out Table

PIN NO.	SIGNAL NAME	SIGNAL TYPE	INPUT/OUTPUT	POLARITY
1	GROUND			
2	SPARE			
3	SPARE			
4	SPARE			
5	EXTPULSE	TTL	OUTPUT	ACTIVE LOW
6	EXT SLS	TTL	OUTPUT	ACTIVE LOW
7	SPARE			
8	PULSE	TTL	INPUT	POSITIVE
9	20 MHz	TTL	INPUT	RISING EDGE
10	SPARE			
11	50% VIDEO	TTL	INPUT	POSITIVE
12	SPARE			
13	SPARE			
14	SELF INTERROGATE	TRISTATE	INPUT/OUTPUT	RISING EDGE
15	GROUND			
16	GROUND			
17	GROUND			
18	GROUND			
19	GROUND			
20	GROUND			
21	GROUND			
22	GROUND			
23	SPARE			
24	GROUND			
25	SPARE			

3. S-1403C IFR BUS Connector (J10011) (To ATC-1400A, J5) Pin-Out Table

PIN NO.	SIGNAL NAME	SIGNAL TYPE	INPUT/OUTPUT	POLARITY
1	GROUND			
2	A0	TTL	INPUT	POSITIVE
3	A1	TTL	INPUT	POSITIVE
4	GROUND			
5	A2	TTL	INPUT	POSITIVE
6	D7	TTL	INPUT/OUTPUT	POSITIVE
7	D6	TTL	INPUT/OUTPUT	POSITIVE
8	A3	TTL	INPUT	POSITIVE
9	GROUND			
10	GROUND			
11	NOT USED			
12	D5	TTL	INPUT/OUTPUT	POSITIVE
13	GROUND			
14	NOT USED			
15	D4	TTL	INPUT/OUTPUT	POSITIVE
16	GROUND			
17	WRITE	TTL	INPUT	POS STROBE
18	D3	TTL	INPUT/OUTPUT	POSITIVE
19	GROUND			
20	READ	TTL	INPUT	POS STROBE
21	D2	TTL	INPUT/OUTPUT	POSITIVE
22	INTA	OC	OUTPUT	ACTIVE LOW
23	INTR	OC	INPUT	ACTIVE
24	D1	TTL	INPUT/OUTPUT	POSITIVE
25	D0	TTL	INPUT/OUTPUT	POSITIVE

THIS PAGE INTENTIONALLY LEFT BLANK.

APPENDIX C - TEST EQUIPMENT REQUIREMENTS

1. General

This Appendix contains a list of test equipment suitable for performing all of the maintenance procedures contained in this manual. Other equipment meeting the specifications listed in this Appendix may be substituted in place of the recommended models. The equipment listed in this Appendix may exceed the minimum required specifications for some of the procedures contained in this manual.

2. Recommended Test Equipment

TYPE	MODEL	SPECIFICATIONS
Dual Pulse Generator	WAVETEK 145 or Equivalent	Functions: Pulse Pulse Delay: 50 ns to 10 ms Pulse Width: 25 ns to 1 ms Output Level: 15 Vp-p into 50 Ω
Frequency Counter	FLUKE 7220A or Equivalent	Frequency Range: 10 Hz to 1300 MHz Resolution: 10 Hz Accuracy: ±1 Count (±Time Base Error)
Heterodyne Monitor	ANZAC MD-141 or Equivalent	
Oscilloscope	TEK 2465 or Equivalent	Bandwidth: dc to 100 MHz Vertical Accuracy: ±10% Time Accuracy: ±0.7% of Time Interval ±0.6% of Full Scale Δ Time Accuracy: ±0.7% of Time Interval ±0.3% of Full Scale

TYPE	MODEL	SPECIFICATIONS
Power Meter	BOONTON 4200 (with Power Sensor) or Equivalent	Range: -25 to -15 dBm Accuracy: ±0.05 dB
RF Signal Generator	HP8640B or Equivalent	Frequency Range: 1 to 1030 MHz Resolution: 0.1 to 100 Hz Accuracy: 2×10^{-6} RF Output: 13 to -130 dBm
Spectrum Analyzer	HP8569B or Equivalent	Frequency Range: 10 kHz to 2.6 GHz Resolution Bandwidth: 300 Hz to 3.0 MHz Display Accuracy Log: <±0.1 dB/dB <±1.5 dB/70 dB Display Accuracy Linear: <±3% of reference level over full 8 division deflection

MP MASTER
MA30523